ASCE Manuals and Reports on Engineering Practice No. 52

Guide for Design of Steel Transmission Towers

Second Edition

Prepared by the
Task Committee on Updating Manual 52
of the
Structural Division
of the
American Society of Civil Engineers

LIBRARY & DOCUMENTATION CENTRE
LARSEN & TOUBRO LTD.
ECC CONSTRUCTION GROUP
P. B. NO: 979
MOUNT POONAMALLEE ROAD
MANAPAKKAM, MADRAS-600 089
Received on: 10/7/90
Acc No. : 3466
621.31922
10/7/90

Published by the
American Society of Civil Engineers
345 East 47th Street
New York, New York 10017-2398

ers, serves as a basis for the design of both guyed and self-supporting steel transmission towers. The basic design recommendations are appropriate for individual members of truss-type structures. Chapters on geometric configurations and methods of analysis provide information on the types of structures covered and the applicable analysis criteria. Design of members includes hot-rolled and cold-formed members. Other subjects covered include design of connections, detailing and fabrication, quality assurance and quality control, construction and maintenance, foundations, and testing.

Library of Congress Cataloging-in-Publication Data

Guide for design of steel transmission towers/prepared by the Task Committee on Updating Manual 52 of the Structural Division of The American Society of Civil Engineers.—2nd ed.

p. cm.—2nd ed.—(ASCE manuals and reports on engineering practice: no. 52)
Rev. ed. of: Guide for design of steel transmission towers. 1971.
Includes bibliographies and index.
ISBN 0-87262-667-9
1. Electric lines—Poles and towers—Design and construction—Handbooks, manuals, etc. I. American Society of Civil Engineers. Task Committee on Updating Manual 52. II. Guide for design of steel transmission towers. III. Series.
TK3242.076 1988
521.319'22'028—dc19 88-19277
CIP

The material presented in this publication has been prepared in accordance with generally recognized engineering principles and practices, and is for general information only. This information should not be used without first securing competent advice with respect to its suitability for any general or specific application.

The contents of this publication are not intended to be and should not be construed to be a standard of the American Society of Civil Engineers (ASCE) and are not intended for use as a reference in purchase specifications, contracts, regulations, statutes, or any other legal document.

No reference made in this publication to any specific method, product, process, or service constitutes or implies an endorsement, recommendation, or warranty thereof by ASCE.

ASCE makes no representation or warranty of any kind, whether express or implied, concerning the accuracy, completeness, suitability or utility of any information, apparatus, product, or process discussed in this publication, and assumes no liability therefor.

Anyone utilizing this information assumes all liability arising from such use, including but not limited to infringement of any patent or patents.

Authorization to photocopy material for internal or personal use under circumstances not falling within the fair use provisions of the Copyright Act is granted by ASCE to libraries and other users registered with the Copyright Clearance Center (CCC) Transactional Reporting Service, provided that the base fee of $1.00 per article plus $.15 per page is paid directly to CCC, 27 Congress Street, Salem, MA 01970. The identification for ASCE Books is 0-87262/88. $1 + .15. Requests for special permission or bulk copying should be addressed to Reprints/Permissions Department.

Copyright © 1988 by the American Society of Civil Engineers, All Rights Reserved.
Library of Congress Catalog Card No.: 88-19277
ISBN 0-87262-667-9
Manufactured in the United States of America.

MANUALS AND REPORTS ON ENGINEERING PRACTICE

(As developed by the ASCE Technical Procedures Committee, July 1930, and revised March 1935, February 1962, April 1982)

A manual or report in this series consists of an orderly presentation of facts on a particular subject, supplemented by an analysis of limitations and applications of these facts. It contains information useful to the average engineer in his everyday work, rather than the findings that may be useful only occasionally or rarely. It is not in any sense a "standard," however; nor is it so elementary or so conclusive as to provide a "rule of thumb" for nonengineers.

Furthermore, material in this series, in distinction from a paper (which expresses only one person's observations or opinions), is the work of a committee or group selected to assemble and express information on a specific topic. As often as practicable the committee is under the general direction of one or more of the Technical Divisions and Councils, and the product evolved has been subjected to review by the Executive Committee of that Division or Council. As a step in the process of this review, proposed manuscripts are often brought before the members of the Technical Divisions and Councils for comment, which may serve as the basis for improvement. When published, each work shows the names of the committees by which it was compiled and indicates clearly the several processes through which it has passed in review, in order that its merit may be definitely understood.

In February 1962 (and revised in April, 1982) the Board of Direction voted to establish:

> series entitled 'Manuals and Reports on Engineering Practice,' to include the Manuals published and authorized to date, future ls of Professional Practice, and Reports on Engineering e. All such Manual or Report material of the Society would have been refereed in a manner approved by the Board Committee on Publications and would be bound, with applicable discussion, in books similar to past Manuals. Numbering would be consecutive and would be a continuation of present Manual numbers. In some cases of reports of joint committees, bypassing of Journal publications may be authorized.

Number	
10	Technical Procedure for City Surveys
13	Filtering Materials for Sewage Treatment Plants
14	Accommodation of Utility Plant Within the Rights-of-Way of Urban Streets and Highways
31	Design of Cylindrical Concrete Shell Roofs
33	Cost Control and Accounting for Civil Engineers
34	Definitions of Surveying and Associated Terms
35	A List of Translations of Foreign Literature on Hydraulics
36	Wastewater Treatment Plant Design
37	Design and Construction of Sanitary and Storm Sewers
40	Ground Water Management
41	Plastic Design in Steel—A Guide and Commentary
42	Design of Structures to Resist Nuclear Weapons Effects
44	Report on Highway and Bridge Surveys
45	Consulting Engineering—A Guide for the Engagement of Engineering Services
46	Report on Pipeline Location
47	Selected Abstracts on Structural Applications of Plastics
49	Urban Planning Guide
50	Report on Small Craft Harbors
51	Survey of Current Structural Research
52	Guide for the Design of Steel Transmission Towers
53	Criteria for Maintenance of Multilane Highways
54	Sedimentation Engineering
55	Guide to Employment Conditions for Civil Engineers
56	Subsurface Investigation for Design and Construction of Foundations of Buildings
57	Operation and Maintenance of Irrigation and Drainage Systems
58	Structural Analysis and Design of Nuclear Plant Facilities
59	Computer Pricing Practices
60	Gravity Sanitary Sewer Design and Construction
61	Introductory Manual on Computer Services
62	Existing Sewer Evaluation and Rehabilitation
63	Structural Plastics Design Manual
64	Manual on Engineering Surveying
65	Construction Cost Control
66	Structural Plastics Selection Manual
67	Wind Tunnel Model Studies of Buildings and Structures

* Numbers 1, 2, 3, 4, 5, 6, 7, 8, 9, 11, 12, 15, 16, 17, 18, 19, 20, 21, 22, 23, 24, 25, 26, 27, 28, 29, 30, 32, 38, 39, 43, and 48 are out of print.

PREFACE

In memory of Frank J. Cortese in recognition of his contribution to this document

In 1971 the American Society of Civil Engineers (ASCE) published *Guide for Design of Steel Transmission Towers*, "Manuals and Reports on Engineering Practice—No. 52." The Manual was developed to serve as a uniform basis for the structural design of self-supporting steel transmission towers. The major thrust of the Manual was to provide an accepted reference for angle shapes used as pin-connected members in trusses. The basic recommendations included modified procedures to more closely reflect the load capabilities of angle members. Manual 52 has been used extensively in the United States and abroad as the basis for design specifications.

In 1984 an ASCE committee was established for updating Manual 52 to reflect new design procedures, availability of new shapes and materials, changes in loading criteria, and results of new test data. This new Manual, *Guide for Design of Steel Transmission Towers*, has been developed to cover the scope of our assignment, but still retain the simplicity of the original Manual. Commentaries to Chapters 4 and 5 have been included to provide background and to retain the basic material covered in the old Manual.

Other ASCE committees are evaluating the feasibility of using load and resistance factor design (LRFD) for transmission towers. The Task Committee on Updating Manual 52 will work closely with these committees to develop appropriate data for the member and connection design recommendations of this Manual.

The committee is grateful to the Peer Review Committee for their thorough review and assistance in clarifying many parts of these recommendations: Dan Jackman, Chairman, Robert Hoop, Robert Roane, Paul Tedesco, and Dave Sudhoff.

The committee wishes to thank Anthony M. DiGioia, John Mozer, Ronald Randle, William Howard, Danny Villaluz, and Don Albritton for their assistance in the preparation of this Manual. Many engineers

reviewed the preliminary draft and provided valuable comments; their efforts are deeply appreciated.

Respectfully Submitted,

E. P. Becker
T. C. Britton, Jr.
T. G. Burley
B. C. Chan
C. L. Clem
F. J. Cortese
D. R. Crissey
G. E. Fortney
J. E. Galewski
E. H. Gaylord
Leon Kempner, Jr.
W. A. Klenk
J. M. Kramer
R. A. Kravitz
Helmut Krawinkler
R. L. Patterson
A. H. Peyrot
H. N. Wentzel

G. M. Wilhoite, Chairman
Task Committee on Updating Manual 52 of the Committee on Electrical Transmission Structures, Structural Division, ASCE

CONTENTS

INTRODUCTION xv

1.0 LOADINGS 1
1.1 Introduction 1
1.2 Special Loading Combinations 1
1.2.1 Multicircuit Towers 2
1.2.2 Minimum Vertical Loads with Maximum Transverse and/or Longitudinal Loads 2
1.2.3 Maximum and Minimum Transverse Loads 2
1.2.4 Strain and Deadend Towers 3
1.2.5 Oblique Wind Loads 3
1.2.6 Transverse Wind on Single Circuit Towers 3
1.2.7 Overhead Ground Wire 3
1.2.8 Wind Loading on Small Line Angle Structures 3
1.2.9 Other Design Considerations 3
1.2.9.1 Variable Height Structures 3
1.2.9.2 Tensioning of Guys 4
1.3 Construction and Maintenance Loads 4
References and Bibliography 8

2.0 GEOMETRIC CONFIGURATIONS 8
2.1 Introduction 8
2.2 Self-Supporting Towers 10
2.3 Guyed Towers 12
2.4 Other Design Considerations 12
2.4.1 Horizontal (Plan) Bracing 12
2.4.2 Member Intersection 12
Bibliography 14

3.0 METHODS OF ANALYSIS 14
3.1 Introduction .....

3.2 Tower Model 14
3.2.1 Determinate Static Analysis 16
3.2.2 First-Order Linear Elastic Analysis 16
3.2.3 First-Order Linear Elastic Analysis Modified for Tension System 16
3.2.4 Second-Order (or Geometrically Nonlinear) Elastic Analysis 17
3.2.5 General Nonlinear Analysis 18
3.2.6 Dynamic Analysis 19
3.3 Special Considerations 19
3.3.1 Node Locations 19
3.3.2 Practical Analysis Features 19
3.3.3 Influence of Member Sizes 19
3.3.4 Computer Analyses to Verify Old Designs 20
3.3.5 Moments in Leg Members 20
3.4 Alternate Modeling of Latticed Masts 21
References and Bibliography 22

4.0 DESIGN OF MEMBERS 24
4.1 Introduction 24
4.2 Material 24
4.3 Minimum Sizes 25
4.4 Slenderness Ratios 25
4.5 Properties of Sections 25
4.6 Allowable Compression 25
4.7 Compression Members: Angles 26
4.7.1 Maximum w/t Ratio 26
4.7.2 Allowable Compressive Stress 26
4.7.3 Determination of F_{cr} 26
4.7.4 Effective Lengths 26
4.7.4.1 Leg Members 26
4.7.4.2 Other Compression Members 27
4.7.4.3 Redundant Members 27
4.7.4.4 Joint Restraint 28
4.7.4.5 Test Verification 28
4.8 Compression Members: Symmetrical Lipped Angles 28
4.8.1 Maximum w/t Ratio 28
4.8.2 Allowable Compression Stress 28
4.8.3 Equivalent Radius of Gyration 29
4.8.4 Minimum Lip Depth 29
4.9 Compression Members Not Covered in Sections 4.7 and 4.8 30
4.9.1 Allowable Compressive Stress 30
4.9.2 Maximum w/t Ratios 30
4.9.3 Effective Widths of Elements in Compression 30

4.9.3.1 Uniformly Compressed Elements 30
4.9.3.2 Elements with Stress Gradient 31
4.9.4 Doubly Symmetric Open Cross Sections 32
4.9.5 Singly Symmetric Open Cross Sections 32
4.9.6 Point-Symmetric Cross Sections 32
4.9.7 Closed Cross Sections 33
4.9.8 Nonsymmetric Cross Sections 33
4.9.9 Lips 33
4.9.10 Eccentric Connections 33
4.10 Tension Members 33
4.10.1 Allowable Tensile Stress 33
4.10.2 Angle Members 34
4.10.3 Eccentric Connections 34
4.10.4 Threaded Rods and Anchor Bolts 35
4.10.5 Guys 35
4.11 Stitch Bolts 35
4.12 Axial Compression and Bending 35
4.13 Axial Tension and Bending 35
4.14 Beams 35
4.14.1 Properties of Sections 35
4.14.2 Allowable Tension 35
4.14.3 Laterally Supported Beams 35
4.14.4 I, Channel and Cruciform Sections 37
4.14.5 Other Doubly Symmetric Open Sections 37
4.14.6 Singly Symmetric I and T Sections 38
4.14.7 Other Singly Symmetric Open Sections 38
4.14.8 Equal Leg Angles 41
4.15 Allowable Shear 41
4.15.1 Beam Webs 41
4.15.2 Angles 42

COMMENTARY ON CHAPTER 4 42
4C.1 Introduction 42
4C.2 Material 43
4C.4 Slenderness Ratios 43
4C.5 Properties of Sections 44
4C.6 Allowable Compression 45
4C.7 Compression Members: Angles 45
4C.7.3 Determination of F_{cr} 45
4C.7.4 Effective Lengths 50
4C.8 Compression Members: Symmetrical Lipped Angles 50
4C.9 Compression Members Not Covered in Sections 4.7 and 4.8 50
4C.9.2 Maximum w/t Ratios 51
4C.9.3 Effective Widths of Elements in Compression ..

4C.9.8 Nonsymmetric Cross Sections 51
4C.10 Tension Members 51
4C.10.5 Guys 51
4C.12 Axial Compression and Bending 52
4C.13 Axial Tension and Bending 52
4C.14 Beams 53
4C.14.4 I, Channel and Cruciform Sections 53
4C.14.6 Singly Symmetric I and T Sections 53
4C.14.7 Other Singly Symmetric Open Sections 53
4C.14.8 Equal Leg Angles 53
4C.15 Allowable Shear 54
4C.15.1 Beam Webs 54
Examples 54
References and Bibliography 67

5.0 DESIGN OF CONNECTIONS 69
5.1 Introduction 69
5.2 General Requirements 69
5.3 Fasteners 69
5.3.1 Materials 69
5.3.2 Bolt Shear Capacity 69
5.3.3 Bolt Tension Capacity 70
5.3.4 Bolts Subject to Combined Shear and Tension 70
5.4 Allowable Bearing Stress 70
5.5 Minimum Distances 70
5.5.1 End Distance 70
5.5.2 Center-to-Center Bolt Hole Spacing 71
5.5.3 Edge Distance 71
5.6 Attachment Holes 72

COMMENTARY ON CHAPTER 5 73
5C.1 Introduction 73
5C.3 Fasteners 73
5C.3.2 Bolt Shear Capacity 73
5C.3.3 Bolt Tension Capacity 73
5C.3.4 Bolts Subject to Combined Shear and Tension 74
5C.4 Allowable Bearing Stress 74
5C.5 Minimum Distances 74
5C.5.1 End Distance 74
5C.5.2 Center-to-Center Bolt Hole Spacing 78
5C.5.3 Edge Distance 78
5C.6 Attachment Holes 78
References and Bibliography 80

6.0 DETAILING AND FABRICATION 82
6.1 Detailing 82
6.1.1 Drawings 82
6.1.2 Approval of Shop Detail Drawings 82
6.1.3 Connections 83
6.1.4 Bolt Spacing 83
6.1.5 Detail Failures During Testing 83
6.1.6 Material 83
6.1.7 Weathering Steel 83
6.1.8 Tension-Only Members 83
6.1.9 Shop Assembly 84
6.1.10 Other Considerations 84
6.2 Fabrication 84
6.2.1 Material 84
6.2.2 Specifications 84
6.2.3 Shop Operations 84
6.2.4 Piece Marks 85
6.2.5 Welding 85
6.2.6 Galvanizing 85
6.2.7 Shipping 85
References and Bibliography 86

7.0 TESTING 87
7.1 Introduction 87
7.2 Foundations 87
7.3 Material 87
7.4 Fabrication 88
7.5 Strain Measurements 88
7.6 Assembly and Erection 88
7.7 Test Loads 89
7.8 Load Application 90
7.9 Loading Procedure 90
7.10 Load Measurement 90
7.11 Deflections 91
7.12 Failures 91
7.13 Disposition of Test Tower 91
7.14 Report 92
Bibliography 92

8.0 QUALITY ASSURANCE (QA)-QUALITY CONTROL (QC) 94
8.1 Introduction 94
8.2 Quality Assurance (QA) Program 95
8.3 Quality Control (QC) Program 95
8.4 Activities Normally Covered 96
8.4.1 Preliminary Review 96

8.4.2 Materials and Subcontracts 96
8.4.3 Inspection 96
8.4.4 Tolerances 96
Bibliography 97

9.0 FOUNDATIONS 98
9.1 Introduction 98
9.2 Foundation Design and Performance Criteria 98
9.2.1 Load and Overload Capacity Factors 98
9.2.2 Differential Movement 99
9.2.3 Unequal Height Leg Extensions 99
9.2.4 Deterioration Considerations 99
9.3 Subsurface Investigation 100
9.4 Foundation Types 100
9.5 General Considerations 101
9.5.1 Steel Grillage 101
9.5.2 Pressed Plate 101
9.5.3 Concrete Foundations with Anchor Bolts ... 101
9.5.3.1 Smooth Bar Anchor Bolts 101
9.5.3.2 Deformed Bar Anchor Bolts 101
9.5.3.3 Compressive Load Transfer with Anchor Bolts 102
9.5.4 Concrete Foundations with Stub Angles 102
9.6 Design Considerations for Structural Members 102
9.6.1 Anchor Bolts with Base Plates on Concrete or Grout 102
9.6.2 Base Plates Supported by Anchor Bolts 104
9.6.3 Stub Angles in Concrete 104
9.7 Development of Anchor Bolts and Stub Angles in the Concrete Foundation 105
9.7.1 Smooth Bar Anchor Bolts 105
9.7.2 Deformed Bar Anchor Bolts 105
9.7.3 Stub Angle Anchorages 106
9.8 Determination of Concrete Design Considerations .. 106
9.8.1 Design of Side Cover Distances for Tension . 106
9.8.2 Design of Side Cover Distance for Shear ... 106
9.8.3 Side Cover Distance for Tension and Shear Combined 108
9.8.4 Other Considerations 108
9.9 Shear Connectors 108
9.9.1 Stud Shear Connectors 108
9.9.2 Angle Shear Connectors 108
9.9.3 Other Considerations 109
9.10 Test Verification 109
References and Bibliography 109

10.0 CONSTRUCTION AND MAINTENANCE 113
10.1 Introduction 113
10.2 Construction 113
10.2.1 General 113
10.2.1.1 Construction Management 113
10.2.1.2 Scope of Work 114
10.2.2 Materials and Material Handling 114
10.2.2.1 Marshalling Yard 114
10.2.2.2 Tower Sites 114
10.2.3 Foundations 114
10.2.3.1 General 114
10.2.3.2 Subsurface Investigations 115
10.2.3.3 Foundations and Anchors 115
10.2.3.4 Structure Grounding 115
10.2.4 Tower Erection 118
10.2.5 Wire Stringing 119
10.2.6 Field Inspection and Records 119
10.2.6.1 General 119
10.2.6.2 Inspector Responsibilities 119
10.2.6.3 Inspections 119
10.3 Maintenance 120
10.3.1 General 120
10.3.2 Periodic Inspections 120
10.3.3 Scheduled Maintenance and Repairs 121
10.3.4 Upgrading and Reconductoring 121
References and Bibliography 122

APPENDIX I—NOTATION 123

INDEX 126

INTRODUCTION

Manual 52, *Guide for Design of Steel Transmission Towers,* has served effectively as a basis for the design of self-supporting steel transmission towers. This revised Manual has been expanded to cover both guyed and self-supporting steel transmission structures. The basic design recommendations are appropriate for individual members of truss-type structures. Assumed loading conditions and overload capacity factors have been removed from the chapter on Loadings since they are covered in other publications.

New chapters on Geometric Configurations and Methods of Analysis provide the user with information on the types of structures covered and the analysis criteria that is applicable. The chapter on Design of Members has been expanded to cover hot-rolled members and cold-formed members. Extensive test data have been reviewed covering materials with yield values up to 65 ksi.

The new chapter on Design of Connections provides the engineer with recommendations that allow latitude to match load capability with the most suitable end and edge distances for detailing. The importance of engineering control in the preparation of details is emphasized by reference to the Engineer of Record (EOR).

The chapter on Detailing and Fabrication covers accepted practice and emphasizes the responsibility of the detailer to establish tolerances that provide the minimum end and edge distances specified in the design. The functions of the EOR are outlined in this chapter.

The chapter on Testing has been completely updated to reflect the information that can be obtained from different test procedures. This chapter discusses the feasibility of monitoring individual members with strain gages.

A new chapter has been included covering Quality Assurance–Quality Control. General issues that should be covered by the purchaser and the supplier are outlined.

The chapter on Foundations covers design recommendations for the material normally furnished by the tower supplier. References are pro-

vided to other documents which cover the actual design of foundations, including concrete and reinforcing steel.

The chapter on Construction and Maintenance provides the tower designer with criteria that need to be incorporated in the initial design. A listing is provided covering the construction requirements for different types of foundations.

Commentaries have been included so that the user has background data on the design recommendations. The Commentaries on Design of Members and Design of Connections illustrate the proper application of the design requirements.

Extensive reference material and supplementary information has been included at the end of each chapter.

The design engineer and the EOR have wide latitude in the selection of the structure configuration and the determination of the design criteria. The committee has brought together the pertinent factors relative to the design criteria for latticed steel transmission structures.

Chapter 1

LOADINGS

1.1 INTRODUCTION

The recommendations of this Manual were developed for use following conventional transmission tower design procedures; specified loads are multiplied by load factors (called overload capacity factors) and the members and connections are designed to resist these loads at stresses approaching failure in yielding or buckling.

Design loading conditions should be determined by the purchaser and shown in the specifications either as load trees or in tabular form. Extensive background information can be found in *Guidelines for Transmission Line Structural Loading* (1984) and *National Electrical Safety Code* (1987).

There are six basic loadings:

1. Applicable NESC (*National Electrical Safety Code* 1987; and other regulatory codes) loadings.
2. Extreme wind.
3. Heavy ice, where applicable.
4. Ice with wind, if applicable.
5. Construction and maintenance loads.
6. One or several longitudinal load cases to provide sufficient tower strength to resist possible cascade failures.

1.2 SPECIAL LOADING COMBINATIONS

Special loading conditions caused by actual field conditions should be considered as they can affect the design of individual members. Several are listed in the following paragraphs.

1.2.1 Multicircuit Towers

For multicircuit towers consideration must be given to the following situations. Will one or more circuits be installed initially and/or will one

or more circuits be removed in the future? An unbalanced loading can govern the design of individual members. A similar determination must be made for overhead ground wires if varying the number installed creates unbalanced loads on the structure.

1.2.2 Minimum Vertical Loads with Maximum Transverse and/or Longitudinal Loads

It is normal practice to specify span and angle limitations for proper structure spotting. For example: line angle = 0°, maximum wind span = 1300 ft, and range of weight spans = 1100–1500 ft; or line angle = 1°, maximum wind span = 1050 ft, and range of weight spans = 1100–1500 ft.

The structure should be designed to withstand the maximum design vertical, transverse, or longitudinal loads, and specified combinations of these maximum values. However, there are members in the structure that are controlled by a load case consisting of the minimum vertical loads combined with the maximum transverse and/or longitudinal loads (Kravitz, 1982).

1.2.3 Maximum and Minimum Transverse Loads

A tower may serve dual functions. It can be used as a tangent tower or at line angles with reduced wind spans. The transverse loadings on the conductor are equal for the line angle and tangent conditions.

Usually, the transverse overhead ground wire loadings are maximum under the line angle condition and minimum under the tangent condition. Therefore, if the slopes of the tower legs intersect on the vertical axis of the tower at a point between the overhead ground wire transverse loads and the center of gravity of the transverse conductor loads, the resulting web stresses may not be maximized unless both the maximum ground wire load condition and the minimum ground wire load condition are analyzed.

1.2.4 Strain and Deadend Towers

Vertical and transverse loads applied to "square" crossarms and bridges of single circuit towers are not always divided equally on each side. This can occur as a result of unequal spans on either side of the structure. Some vertical spans can cause uplift loads at the attachment point. Stringing procedures on strain and dead-end towers must be carefully reviewed to ensure that the sequence of dead ending the wires does not create torsional stresses that exceed the design conditions.

1.2.5 Oblique Wind Loads

Some structures have transverse faces with larger areas exposed to the wind than the longitudinal faces. These structures should be reviewed for the combined transverse and longitudinal loadings from oblique winds. Oblique winds can also be critical on tall structures.

1.2.6 Transverse Wind on Single Circuit Towers

It is recommended that the design wind pressure on the projected area be applied to both overhead ground wire peaks. If the longitudinal faces above the waist are widely separated, the wind can cause equal loads on both faces.

1.2.7 Overhead Ground Wire

Generally, the overhead ground wire is installed at a smaller sag than the conductors. As a result, in rolling to rough terrain, the vertical span of the overhead ground wire on an individual structure may be greater, or less, than the vertical span of the conductors. The tower should be suitable for these unequal vertical spans.

1.2.8 Wind Loading on Small Line Angle Structures

For the design of single circuit, horizontal configuration towers, consideration should be given to wind on wire and tower in the opposite direction of a line angle. This condition may be critical in the design of the main members between the tower crossarm and the tower waist.

1.2.9 Other Design Considerations

1.2.9.1 Variable Height Structures

During the analysis and design of guyed-vee structures the shortest and tallest mast must be investigated to establish the maximum stresses in the tower and the foundation.

For self-supporting towers with unequal length leg extensions, the shear taken by the shorter leg extension can be greater and create larger loads in lower bracing members. The tower should be analyzed with the extreme leg combinations that are used on a single structure.

1.2.9.2 Tensioning of Guys

The determination of the initial tension of guys must be based on the movement of the guy anchor under load, the length and size of the guy, and the allowable deflection of the structure. On tangent structures, pretensioning of guys to 10% of their rated breaking strength is normally sufficient to avoid a slack guy. On special guys, such as a bridge cable,

the supplier's instructions should be followed. For some installations, guys are furnished by the supplier cut to length with end fittings installed and the cable prestressed. For other installations, guys are cut to length and end fittings installed in the field. A turnbuckle, or other adjustment device, is installed for guy adjustments.

1.3 CONSTRUCTION AND MAINTENANCE LOADS

During stringing operations, it is possible for the pulling line of the conductors, or the ground wires, to slip off the sheave and hang in the stringing block. This can produce longitudinal loads on the tower roughly equal to the stringing tension.

It is common to temporarily terminate the pulling of wire at suspension and strain towers. At the suspension tower, it is normal practice to temporarily "catch off" the wire with a guy until final sagging can be completed. The "catch off" guy can create a longitudinal unbalance and an increased vertical load on the structure. The structure should be suitable for supporting these temporary loads.

On tangent structures the weight of the wire must be supported when the wire is transferred from the stringing blocks to the permanent hardware. On angle structures the resultant of the wire weight and the transverse load caused by the angle must be supported. Proper loadings for all maintenance activities should be specified by the purchaser on the design drawing.

Guidelines for Transmission Line Structural Loading (1984) provides additional suggestions relative to other conditions that can create longitudinal loads on the structure.

REFERENCES AND BIBLIOGRAPHY

References

Guidelines for Transmission Line Structural Loading. (1984). Commit. on Electr. Transm. Struct. of Commit. on Anal. and Design of Struct. of Struct. Div. ASCE.

Kravitz, R. A. (1982). "Transmission line tower analysis and design in review." *Paper 82 WM 204-6*, IEEE Power Eng. Soc., Winter Meeting, New York , N.Y.

National Electrical Safety Code. (1987). Amer. Nat. Stand. C2, Inst. of Electr. and Electron. Eng., Inc., New York, N.Y.

Bibliography

Angelos, A., and Cluts, S. (1977). "Unbalanced forces on tangent transmission structures." *Paper A 77 220-7*, IEEE Power Eng. Soc., Winter Meeting, New York, N.Y.

Batts, M. E., Russell, L. R., and Simiu, E. (1980). "Hurricane wind speeds in the United States." *J of the Structural Division*, ASCE, 106 (ST10), 2001-2016.

Campbell, D. B. (1970). "Unbalanced tensions in transmission lines." *J of the Structual Division*, ASCE, 96 (ST10), 2189-2207.

Chiu, A. N. L. (1970). "Response of structures to time-varying wind loads." *J of the Structural Division*, ASCE, 96 (ST2), 381-391.

Comellini, E., and Manuzio, C. (1968). "Rational determination of design loadings for overhead line towers." *Proc. Int. Conf. on Large High Voltage Electric Systems*, CIGRE Paper 23-08.

Davenport, A. G. (1960). "Rationale for determining design wind velocities." *J of the Structural Division*, ASCE, 86 (ST5), 39-68.

Davenport, A. G. (1967). "Gust loading factors." *J of the Structural Division*, ASCE, 93 (ST3), 11-34.

DiGioia, A. M., Pohlman, J. C., and Ralston, P. (1982). "A new method for determining the structural reliability of transmission lines." *Proc. Int. Conf. on Large High Voltage Electric Systems*, CIGRE Paper 22-08.

Ervik, M., and Fikke, S. M. (1981). "Development of a mathematical model to estimate ice loading on transmission lines by use of general climatological data." *Paper 81 WM 204-7*, IEEE Power Eng. Soc., Winter Meeting, Atlanta, Ga.

Farr, F. W., Ferguson, C. M., McMurtrie, N. J., Steiner, J. R., White, H. B., and Zobel, E. S. (1964). "A guide to transmission tower design loadings." *Tran. Paper 64-62*, IEEE Transm. and Distribution Commit., Winter Power Meeting, New York, N.Y.

Ghannoum, E. (1981). "A rational approach to structural design of transmission lines." *Paper 81 WM 224-5*, IEEE Power Eng. Soc., Winter Meeting, Atlanta, Ga.

Ghannoum, E. (1983). "Probabilistic design of transmission lines—Part I and Part II." *Papers 83 WM 152-6 and 83 WM 153-4*, IEEE Power Eng. Soc., Winter Meeting, New York, N.Y.

Ghannoum, E. (1984). "Improving transmission line design by using reliability techniques." *Paper 84 WM 229-1*, IEEE Power Eng. Soc., Winter Meeting, Dallas, Tex.

Goodwin, E. J., Davenport A. G., Davidson, H. L., DiGioia, A. M., and Power, B. A. (1980). "Probability-based wind loadings for the design of transmission line structures." *Paper 80 SM 636-1*, IEEE Power Eng. Soc., Summer Meeting, Minneapolis, Minn.

Goodwin, E. J., Mozer, J. D., and DiGioia, A. M. (1982). "Transmission struc-

ture design utilizing probability-based load and resistance factor design." *Paper 82 SM 469-5*, IEEE Power Eng. Soc., Summer Meeting, San Francisco, Calif.

Grigoriu M. (1985). "Estimation of design wind speeds from short-term records." *Report EL-3972*, Electric Power Research Inst., Palo Alto, Calif.

Grigoriu, M., Krishasamy, S., and Longo, V. J. (1985). "Estimation of transmission line design wind speeds from limited data." *Paper 85 SM 406-4*, IEEE Power Eng. Soc., Summer Meeting, Vancouver, B.C., Canada.

Hall, E. K. (1977). "Ice and wind loading analysis of Bonneville Power Administration's transmission lines and test spans." *Paper A 77 735-4*, IEEE Power Eng. Soc., Summer Meeting, Mexico City, Mexico.

Krishnasamy, S. G. (1985). "Assessment of weather induced transmission line loads on a probabilistic basis." *Paper 85 WM 234-0*, IEEE Power Eng. Soc., Winter Meeting, New York, N.Y.

Krishnasamy, S. G., Ford, G. L., and Orde, C. I. (1981). "Predicting the structural performance of transmission lines uprated by reconductoring." *Paper 81 WM 048-8*. IEEE Power Eng. Soc., Winter Meeting, Atlanta, Ga.

Landers, P. G. (1981). "EPRI-sponsored transmission line loading research." *Paper 81 TD 719-4*, IEEE Power Eng. Soc., 1981 T&D Conference, Minneapolis, Minn.

Lindsey, K. E. (1977). "Mathematical theory of longitudinally loaded elastic-plastic transmission lines-statics." *Paper F 77 691-9*, IEEE Power Eng. Soc., Summer Meeting, Mexico City, Mexico.

"Loadings and Strength of Transmission Line Systems, Parts 1 Through 6." (1977). Subgroup on Loadings and Strength of Transmission Line Systems, *Papers A 77 228-0, A 77 229-8, A 77 230-6, A 77 231-4, A 77 232-2, A 77 233-0*, IEEE Power Eng. Soc., Winter Meeting, New York, N.Y.

"Loadings for Electrical Transmission Structures." (1982). Commit. on Electr. Transm. Struct. of Commit. on Anal. and Design of Struct. of Struct. Div., *J of the Structural Division*, ASCE, 108 (ST5), 1088-1105.

"Longitudinal Loading Tests on a Transmission Line." (1978). *Report EL-905*, Electric Power Research Institute, Palo Alto, Calif.

"Longitudinal Unbalanced Loads on Transmission Line Structures." (1978). *Report EL-643*, Electric Power Research Institute, Palo Alto, Calif.

Mehta, K. C, Ed. (1980). *Report RP-1277*, Electric Power Research Institute, Palo Alto, Calif.

Mehta, K. C. (1985). "Wind loads on electrical transmission structures." *Proc. Conf. on Innovations in the Design of Electrical Transmission Structures*, Struc. Div., ASCE, Kansas City, Mo., Aug., 11-20.

Minimum Design Loads for Buildings and Other Structures. (1982). ANSI A58.1-1982, Amer. Nat. Stand. Inst., New York, N.Y.

Mozer, J. D., Peyrot, A. H., and DiGioia, A. M. (1984). "Probabilistic design of transmission line structures." *J Struct. Eng.*, ASCE, 110 (10), 2513-2528.

Mozer, J. D., Pohlman, J. C., and Fleming, J. F. (1977). "Longitudinal load analysis of transmission line systems." *Paper F 77 221-5*, IEEE Power Eng. Soc., Winter Meeting, New York, N.Y.

Peyrot, A. H. (1985). "LRFD format for transmission structures." *Proc. Conf. on Innovations in the Design of Electrical Transmission Structures*, Struct. Div., ASCE, Kansas City, Mo., Aug., 1-10.

Peyrot, A. H., and Dagher, H. J. (1984). "Reliability-based design of transmission lines." *J Struct. Eng.*, ASCE, 110 (11), 2758-2776.

Peyrot, A. H., Kluge, R. O., and Lee, J. W. (1979). "Longitudinal loads from broken conductors and broken insulators and their effect on transmission lines." *Paper F 79 233-8*, IEEE Power Eng. Soc., Winter Meeting, New York, N.Y.

Pohlman, J. C., and Landers, P. (1981). "Present state-of-the-art of transmission line icing." *Paper 81 TD 717-8*, IEEE Power Eng. Soc., 1981 T&D Conference, Minneapolis, Minn.

Simiu, E. (1973). "Gust factors and alongwind pressure correlations." *J of the Structural Division*, ASCE, 99 (ST4), 773-783.

Simiu, E. (1976). "Wind climate and failure risks." *J of the Structural Division*, ASCE, 102 (ST9), 1703-1707.

Simiu, E., and Filliben, J. J. (1980). "Weibull distributions and extreme wind speeds." *J of the Structural Division*, ASCE, 106 (ST12), 2365-2374.

Simiu, E. J., Changery, M., and Filliben, J. J. (1980). "Extreme wind speeds at 129 airport stations." *J of the Structural Division*, ASCE, 106 (ST4), 809-817.

Thom, H. C. S. (1960). "Distribution of extreme winds in the United States." *J of the Structural Division*, ASCE, 86 (ST4), 11-24.

Thom, H. C. S. (1968). "New distributions of extreme winds in the United States." *J of the Structural Division*, ASCE, 94 (ST7), 1787-1801.

White, H. B. (1985). "A practical approach to reliability design." *Paper 85 WM 253-0*, IEEE Power Eng. Soc., Winter Meeting, New York, N.Y.

Wilhoite, G. M. (1972). "Wind recommendations for transmission towers." *J Struct. Engrg.*, ASCE, 98 (ST2), 447-463.

"Wind Forces on Structures." (1961) Task Commit. on Wind Forces of Commit. on Loads and Stresses of the Struct. Div., *Transactions*, ASCE, Part II, 126, 1124-1198.

Winkelman, P. F. (1974). "Investigation of ice and wind loads, galloping, vibrations and subconductor oscillations." Bonneville Power Administration, Sept.

Wood, A. B., and McLellan, M. (1982). "Transmission line design—The ultimate load concept." *Proc. Int. Conf. on Large High Voltage Electric Systems*, CIGRE Paper 22-01, Sept.

Chapter 2

GEOMETRIC CONFIGURATIONS

2.1 INTRODUCTION

This chapter presents some typical tower configurations. The geometric configuration of a latticed transmission tower is based on the overhead ground wire shield coverage, number of circuits, conductor phase arrangement selected to satisfy the electrical and mechanical clearances, right-of-way requirements, and aesthetic design criteria.

Three basic tower definitions are recommended: suspension, strain, and dead-end structures. The conductor phases pass through and are suspended from the insulator support points of a suspension tower. The strain tower conductor attachment points are made by attaching the conductor to a dead-end clamp, a compression or bolted fitting, and connecting the clamp, through the insulator string, directly to the tower. The jumper is looped through or around the tower body to electrically connect the adjacent spans. Dead-end tower conductor attachments are the same as for the strain tower. Generally, dead-end towers have different tensions or conductor sizes on each side of the structure; this creates an intact unbalanced longitudinal load. Overhead ground wires are attached to the towers using similar methods as outlined for the conductors.

Additional nomenclature for the basic tower types is used to help identify the line angle at a particular structure caused by a change in direction of the line. The term "tangent" is prefixed to the basic tower type for zero line angle and the term "angle" is used when there is a line angle. Therefore the following terminology is recommended: tangent suspension, angle suspension, tangent strain, angle strain, tangent dead end, and angle dead end.

2.2 SELF-SUPPORTING TOWERS

Some typical self-supporting tower configurations for single and double circuit towers are shown in Fig. 2.1.

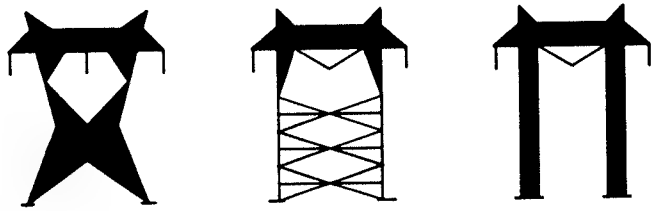

FLAT SINGLE CIRCUIT

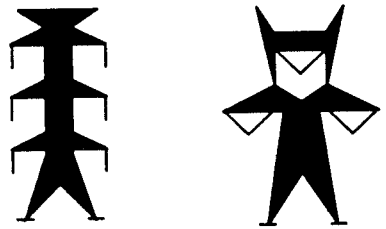

VERTICAL DOUBLE CIRCUIT

DELTA SINGLE CIRCUIT

FIG. 2.1.—Examples of Self-Supporting Towers

A single circuit structure may have phases in a horizontal (flat) configuration, a vertical configuration or in a delta configuration. The horizontal configuration provides the lowest profile, the vertical configuration requires the minimum width right-of-way, and the delta configuration can reduce electrical line losses.

The conductor phases for a double circuit tower can be placed directly over one another. An alternative is to offset the phases horizontally; this is usually the practice where ice unloading (sleet jump) or galloping conductors is a possibility. Offsets also provide clearance to minimize possible contact between wires during stringing. A delta phase configuration can also be used.

The development of the tower configuration starts with the upper portion. This section of the tower is designed for the selected vertical and horizontal phase spacing and electrical clearances around each conductor. The configuration should be as compact as possible around each conductor. The lower portion of the tower is designed next. The wider the tower base the smaller the footing loads, but widening the tower base increases the length and weight of the bracing members. Therefore, an economical balance must be reached between the tower base width and the size of the bracing members. This is controlled by the face slope,

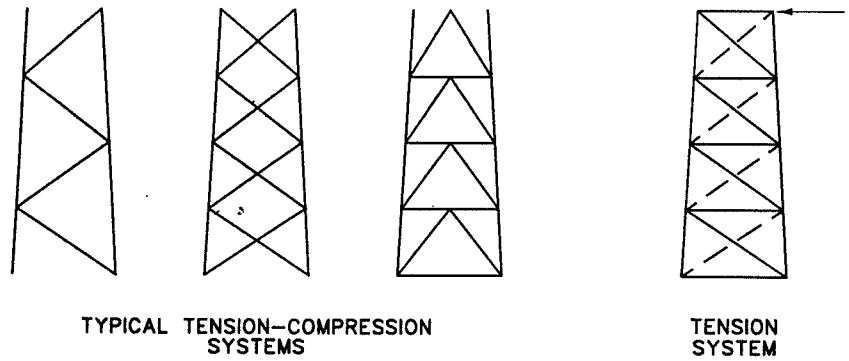

FIG. 2.2.—Bracing Systems

or bevel, of the tower legs, which varies from 3/4 in 12 to 2 1/2 in 12. Normally the heavier towers will have the larger face slopes.

The arrangement of the tower members should keep the tower geometry simple by using as few members as possible. Ideally, the tower members should be fully stressed under more than one loading condition. The ultimate goal is to strive for an economical structure that is well proportioned and attractive.

Fig. 2.2 shows typical web bracing systems used in transmission towers. The web bracing can be designed using a tension-compression system, a tension system, or combinations of these systems. For towers with high web member stresses under intact or stringing conditions, such as dead-end or angle towers with over 20° line angle, it is common practice to use a tension-compression bracing system.

Typical transmission towers have a square body configuration, and in the lower section the bracing in all faces is identical. Rectangular configurations have been used very successfully when proper attention is given to the longitudinal strength. This configuration has less duplication of pieces; in addition, closer attention must be given to foundation movements due to the increased height-to-width ratio of the longitudinal faces of the structure.

Variable tower heights are obtained by adjusting the heights of the leg extensions and/or adding tower body extensions. Heights of leg extensions can vary from 5 to 50 ft. Tower body extensions are generally in height increments of 20 ft. (Fig. 2.3).

2.3 GUYED TOWERS

Guyed towers are often used for single circuit lines. Typical guyed tower configurations are guyed-portal, guyed-vee, guyed-wye, guyed-delta, and chainette (see Fig. 2.4).

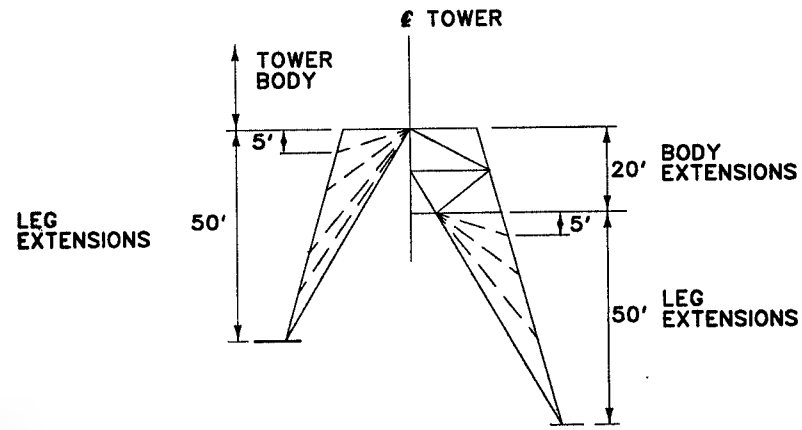

(OTHER HEIGHT INCREMENTS AND COMBINATIONS ARE ALSO USED)

FIG. 2.3.—Tower Extensions

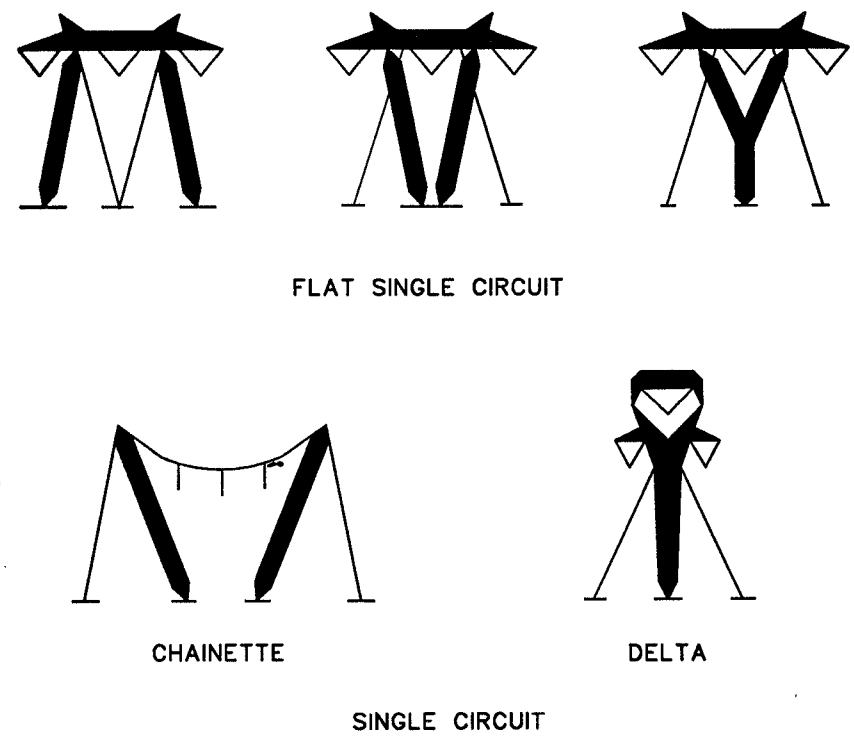

FIG. 2.4.—Examples of Guyed Towers

The laced columns of guyed structures have tension-compression bracing systems. Long slender laced columns must be designed as beam columns. Shear deformations from wind loads and eccentricities can reduce the buckling capacity of the overall column. The analysis of chainette structures requires that the displacement of the conductor support assembly be considered under transverse loading.

Generally, guyed towers are used in flat to rolling terrain. They can be used in rough terrain if guy slopes are sufficiently steep so that the downhill guy leads are not excessively long.

2.4 OTHER DESIGN CONSIDERATIONS

2.4.1 Horizontal (Plan) Bracing

In some structures horizontal bracing is required to distribute shear and torsional forces. Horizontal bracing is also used in square and rectangular towers and masts to support horizontal struts and to provide stiffer structures to assist in reducing distortion caused by oblique wind loads. Horizontal bracing is normally used at levels where there is a change in the slope of the tower leg to assist the bracing system in resolving the horizontal component.

In square and rectangular towers it is not unusual for the structure to extend 75 ft from the foundation to the first panel of horizontal bracing. The cross section of the tower, the stiffness of the lacing members, and the torsional load distribution normally determine how often horizontal cross-bracing is required.

For structures with a square or rectangular configuration greater than 200 ft high, or heavy dead-end towers, it is suggested that horizontal bracing be installed at intervals not exceeding 75 ft. The spacing of horizontal bracing is dictated by general stiffness requirements to maintain tower geometry and face alignment. Factors which affect this determination are type of bracing system, the face slope, the dead load sag of the face material, and erection considerations that affect splice locations and member lengths.

2.4.2 Member Intersections

The included angle between two intersecting members should not be less than 15° to provide for proper force distribution.

BIBLIOGRAPHY

"A Guide to the Conceptual Design of Transmission Line Structures." (1973). Task Group on Line Loading and Strength for Transmission Line Structures, *Paper C 73 378-7*, IEEE Power Engr. Soc., Summer Meeting, Vancouver, B.C., Canada.

Alpert, S. D., Fortney, G. E., and Shaw, J. D. (1963). "Tower design for the VEPCO 500 kV project." *Paper CP 63-671*, IEEE Southeastern District Meeting, Richmond, Va.

Behncke, R., and White, H. B. (1984). "The Alicura 500 kV transmission system." *Proc. Int. Conf. on Large High Voltage Electric Systems*, CIGRE Paper 22-02.

Bergstrom, R. N., Arena, J. R., and Kramer, J. M. (1960). "Design of self supported steel transmission towers." *J. of the Power Division*, ASCE, 86 (P03), 55-88.

"BPA 1100 kV Transmission System Development." (1979). *Publication 79 TH 0057-0-PWR*, IEEE Power Engr. Soc., Winter Meeting, New York, N.Y.

Channoum, E., and Lamarre, M. (1985). "Hydro-Quebec's experience with the design and construction of 1500 km of 735 kV chainette transmission lines." *Paper 85 WM 200-1*, IEEE Power Engr. Soc., Winter Meeting, New York, N.Y.

Hoffman, G. B., and Arena, J. R. (1966). "Allegheny power system design of 500 kV towers." *Paper 31 TP 66-20*, IEEE Power Group, Winter Meeting, New York, N.Y.

Kravitz, R. A., and Samuelson, A. J. (1969). "Tower designs for AEP 765 kV Project." *J. of the Power Division*, ASCE, 95 (P02), 305-319.

Marsico, R., Ryan, R. D., and Retallack, R. L. (1985). "AEP chainette structure development." *Paper 85 WM 201-9*. IEEE Power Engr. Soc., Winter Meeting, New York, N.Y.

Petersen, W. O. (1962). "Design of EHV steel tower transmission lines." *J. of the Power Division*, ASCE, 88, (P01) 39-65.

Sansom, H. J., Rathgeber, W. E., Kravitz, R. A., and Manuel, F. S. (1982). "Colorado-Utes 345 kV steel latticed H frame line designed as a structural system." *Paper 82 WM 203-8*, IEEE Power Engr. Soc., Winter Meeting, New York, N.Y.

White, H. B. (1978). "A modular design system for guyed-V towers." *Paper F 78 151-3*, IEEE Power Engr. Soc., Winter Meeting, New York, N. Y.

Wood, D. L. (1962). "Optimized tangent towers for 345 kV transmission." *J. of the Power Division*, ASCE, 88, (P02), 1-8.

Yasuda, E. J., and Dewey, F. B. (1979). "BPA's new generation of 500 kV lines." *Paper F 79 743-6*, IEEE Power Engr. Soc., Summer Meeting, Vancouver, B.C., Canada.

Chapter 3

METHODS OF ANALYSIS

3.1 INTRODUCTION

This chapter describes various methods which can be used to calculate the axial forces in the members of a steel latticed structure, self-supported or guyed. Moments normally exist in members of a tower (because of framing eccentricities, slightly eccentric loads, lateral wind load on members, etc.); usually they are not significant. Since moments are small and it is impractical to model every eccentric detail, towers are analyzed almost exclusively as ideal trusses, i.e., as structures made up of straight members or cables, pin-connected at joints. These analyses produce only joint displacements, tension or compression in members, and tension in cables. While not considered in analysis, moments from normal framing eccentricities of angles are accounted for in the design of the member by derating the angles' load capacity. For other shapes framing eccentricities must be considered in the design of the members.

3.2 TOWER MODEL

A tower is described by a design drawing which shows overall dimensions, joints, and member locations. Because of the high degree of symmetry of most towers, a transverse view, a longitudinal view, and a few horizontal cross-section or plan views are sufficient to describe the entire structure. Fig. 3.1 shows various analysis concepts. For purposes of analysis, a tower can be represented by a model composed of members (and sometimes cables) interconnected at joints. Members are normally classified as primary and secondary (also called redundant) members. Primary members form the triangulated system (three-dimensional truss) that carries the loads from their application points down to the tower foundation. Secondary members are used to provide intermediate bracing points to the primary members and thus reduce unbraced lengths of the primary members. They can easily be identified on a

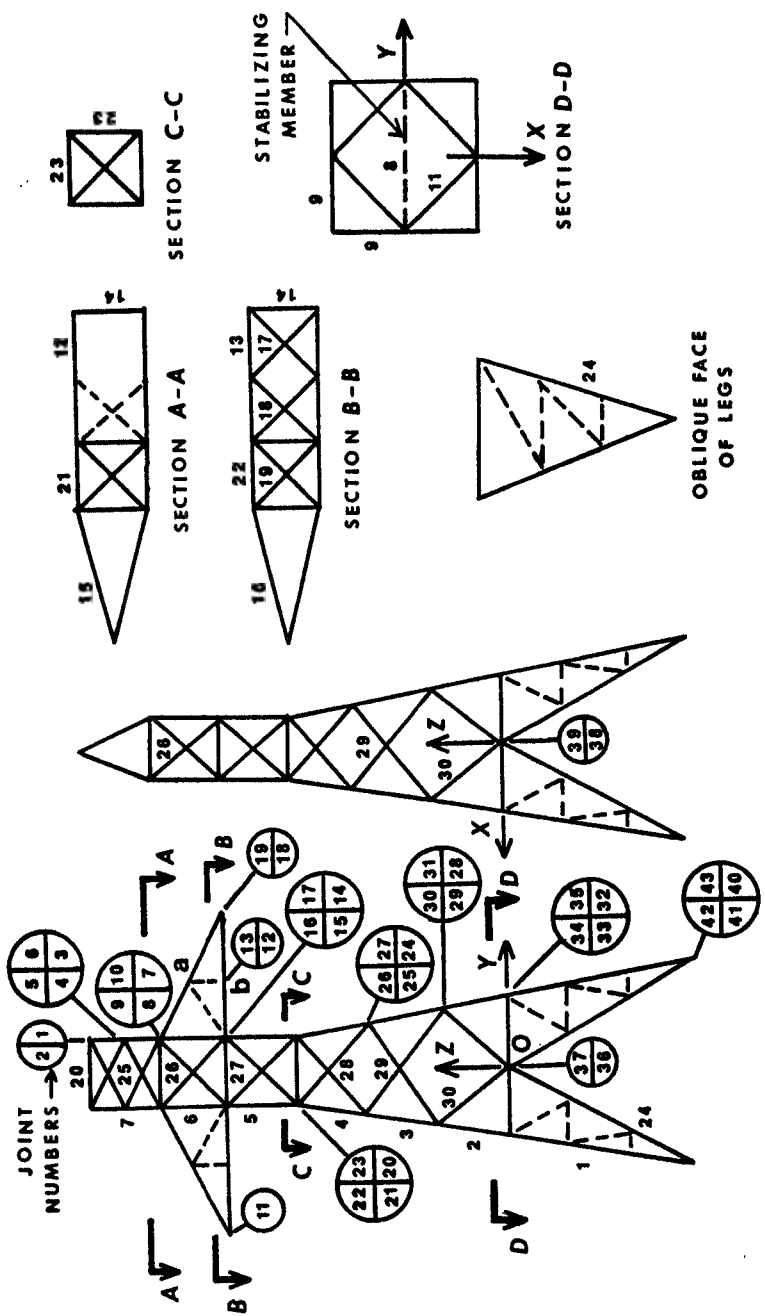

FIG. 3.1.—Model of Simplified Tower

drawing as members inside a triangle formed by primary members. In Fig. 3.1, the dotted lines represent secondary members. The forces in the secondary members are equal to zero in a linear first-order truss analysis. In Fig. 3.1, the joints are identified by numbers in circles, semi-circles, or quarter-circles.

3.2.1 Determinate Static Analysis

Before the advent of computers, statically indeterminate trusses were very difficult to analyze. Therefore, simplifying assumptions were made in order to reduce the analysis of a tower to independent analyses of several statically determinate plane trusses. These assumptions are well described in classical textbooks on structural analysis and in Marjerrison (1968) and Zar and Arena (1979). These simplified analyses (algebraic or graphical) require that the analyst visualize the load path through the determinate plane trusses. While the graphical method (force diagram) is time-consuming and somewhat limited to simple configurations, it provides the designer with a very good feel for how the tower behaves and how the bracing functions under each type of applied load.

3.2.2 First-Order Linear Elastic Analysis

This refers to any matrix or finite element computer method that treats all solid members as linearly elastic (capable of carrying tension as well as compression) and assumes that the loaded configuration of the structure is identical to its unloaded configuration, i.e., secondary effects of the deflected shape are ignored. Redundant members need not be included in this type of analysis since they have no effect on the forces in the load-carrying members. This type of analysis is generally used for self-supporting latticed towers.

3.2.3 First-Order Linear Elastic Analysis Modified for Tension System

It is sometimes economical to assume that certain long slender bracing members (with L/r values greater than 300 and called tension-only members) will buckle under a compression load; after the compression strength of such members is reached, the loads are redistributed through adjacent still-intact members. Fig. 3.2 shows how a tension-compression system becomes a tension system when the compression member "AK" is loaded beyond its compression capacity. There is still some question as to the load that can be carried by a member strained in compression beyond the value e_{max} that corresponds to its theoretical capacity F_{max} (Fig. 3.3(a)). Some analysts assume that the member is still capable of carrying its buckling load irrespective of the amount of strain beyond e_{max} (Fig. 3.3(b)). Others assume that the member carries no load

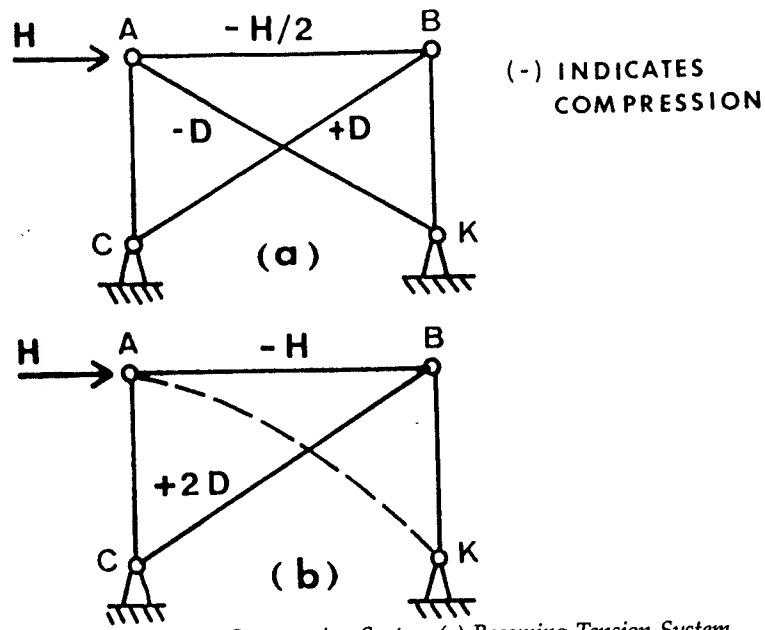

FIG. 3.2.—Tension-Compression System (a) Becoming Tension System (b) When Member "AK" Buckles

and utilize the tension-only assumption (Fig. 3.3(c)). A first-order program can be adjusted to handle tension-only members (*BPA Tower Analysis and Design* 1987; Rossow et al. 1975). The process requires a certain number of iterations to determine which bracing members are loaded beyond their compression capacity and to remove such members from the model, thus forcing the remaining bracing members to carry the load in tension.

3.2.4 Second-Order (or Geometrically Nonlinear) Elastic Analysis

Displacements of a deformed structure create forces in addition to those calculated in a first-order analysis. In building frameworks and flexible pole structures this is called the PΔ effect. A second-order or nonlinear (in the geometric sense) analysis is one that produces forces that are in equilibrium in the deformed geometry. A nonlinear analysis is normally performed as a succession of first-order analyses; the geometry of the structure is updated at the end of each iteration (Peyrot 1985; Roy et al. 1984). Conventional self-supporting towers are usually sufficiently rigid and a nonlinear analysis is not required. However, flexible towers and guyed structures may require a nonlinear analysis. A guy which becomes slack under certain load cases is an illustration of a geometric nonlinearity.

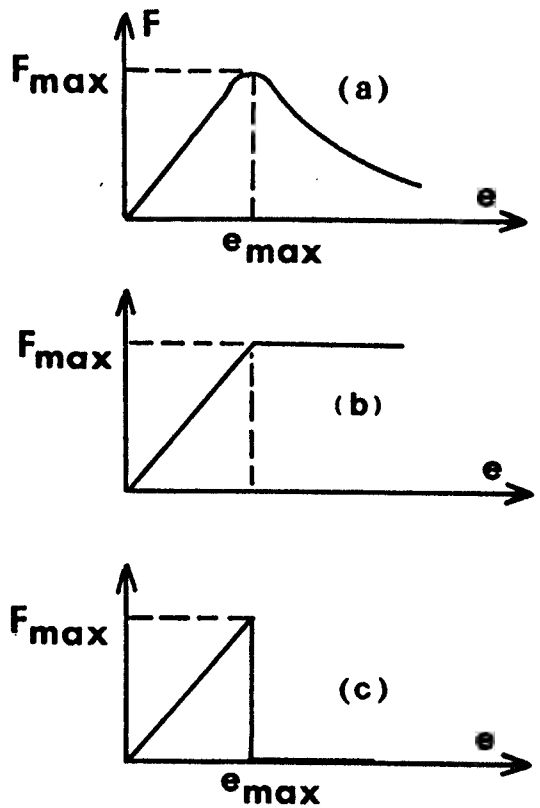

FIG. 3.3.—Relationships Between Member Compression Force and Shortening. (a) Actual Member. (b) Liberal Assumption. (c) Conservative Assumption

3.2.5 General Nonlinear Analysis

If, in addition to considering large displacements, the analyst wishes to consider the nonlinear stress-strain behavior of members (Mueller et al. 1985), the actual eccentricities of the connections, and the slippage of bolts, which occurs at high loads, then a general nonlinear finite element analysis should be used. While this has been done in connection with research projects, such analyses are not presently used in connection with the design of new structures.

3.2.6 Dynamic Analysis

Dynamic analyses of towers can be performed with general purpose finite element programs, but there is no indication that such analyses are needed for design purposes. (*Guidelines for Transmission Line Structural Loading* 1984; Long 1974).

3.3 SPECIAL CONSIDERATIONS

3.3.1 Node Locations

The locations of the nodes (or working points) in any computer model should be at the intersection points of the centroidal axes of the members. Slight deviations from these locations will not significantly affect the distribution of forces.

3.3.2 Practical Analysis Features

For practical applications, a computer program for the analysis of latticed structures should include the following features: automatic generation of nodes and members that utilize linear interpolations and symmetries, and interactive graphics to ascertain the correctness of the geometry of the tower. The program should also include provisions for automatic handling of planar nodes and mechanisms (unstable subassemblies) which will develop in a small group of nodes and members. Out-of-plane instabilities or mechanisms are generally prevented in actual towers by the bending stiffness of continuous members that pass through the joints. Rossow et al. (1975) and Peyrot (1985) include discussions of the problem and possible solutions. Nodes 3, 4, 5, and 6 in Fig. 3.1 are planar nodes, i.e., all members meeting at those points lie in the same plane. Joints 12 and 13 are also planar nodes if the redundant member "ab" is not included in the model. The diaphragm in section D-D is a mechanism in the absence of member 8 (shown as a dotted line).

3.3.3 Influence of Member Sizes

The results of a computer analysis normally depend on the actual member sizes which are used in the model. If two analysts use the same member sizes and assumptions (linear, geometrically nonlinear, etc.), they should obtain identical member forces. However, if they use the same assumptions but different member sizes, the corresponding forces may differ. If they use programs based on different assumptions, then the member forces may be quite different (Kravitz 1982).

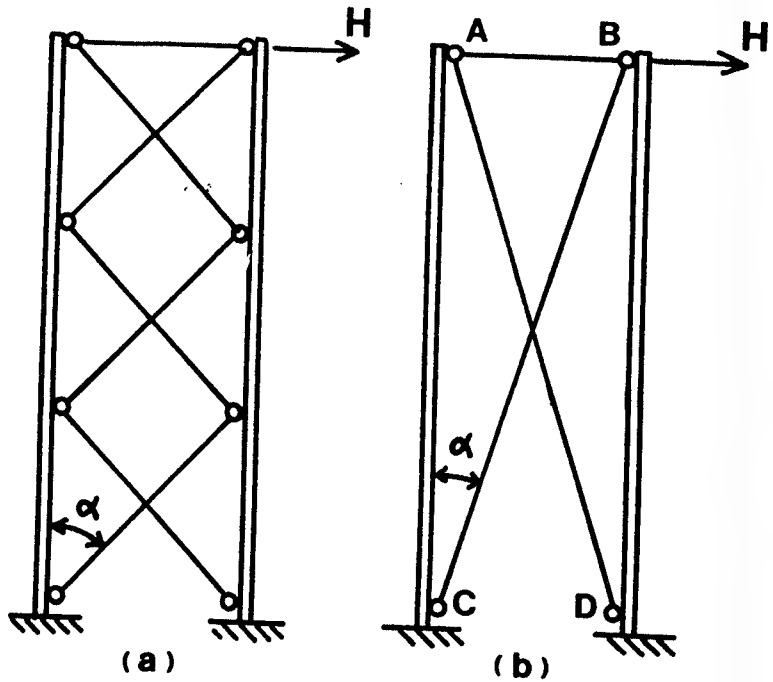

FIG. 3.4.—Braced Systems Under Shear Load. (a) Stiff Bracing. (b) Insufficiently Stiff Bracing

3.3.4 Computer Analyses to Verify Old Designs

When analyzing an existing tower, careful attention must be given to the method of analysis employed when the tower was originally designed (Kravitz 1982). If the tower was originally designed by manual (algebraic or graphical) methods and the design loads are not changed, it is quite normal for any computer analysis to indicate forces in the same members which are different from those from the manual methods. The engineer should determine and document why the differences exist before proceeding with the computer analysis. If the tower is to be upgraded and new design loads specified, then it is normally more cost-effective to rely on a computer analysis. A correlation of past model assumptions with present model assumptions should be performed for the entire structure, not just a part of it.

3.3.5 Moments in Leg Members

Occasionally, moments can occur in a leg or crossarm corner member if the bracing is insufficiently stiff (Roy et al. 1984). Fig. 3.4(a) represents a situation where the bracing is sufficiently stiff to carry all the shear

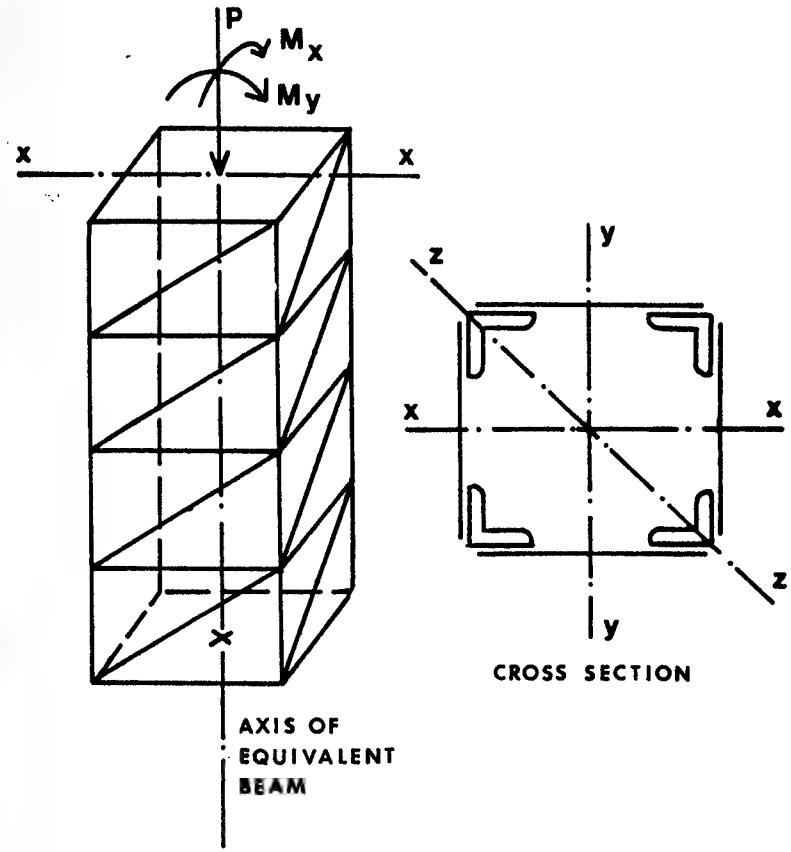

FIG. 3.5.—Segment of Latticed Mast Idealized as Beam

load H. Fig. 3.4(b), however, represents a case where the bracing system, because of the small value of the angle α and small diagonal member sizes, is insufficiently stiff; therefore, the diagonals carry only a portion of the shear; the remainder of the shear produces moments in the vertical members "AC" and "BD". If moments are anticipated in leg members, it is prudent to use an analysis method that models leg members as beams. Other members in the tower can still be modeled as truss elements.

3.4 ALTERNATE MODELING OF LATTICED MASTS

Guyed structures and H-frames may include masts built-up with angles at the corners and lacing in the faces as shown in Fig. 3.5. The overall cross section of the mast is either square, rectangular, or triangu-

lar. Latticed masts typically include a very large number of members and are relatively slender, i.e., may be susceptible to second-order stresses. One alternative to modeling a mast as a three-dimensional truss system is to represent it by a model made up of equivalent beams. The properties of an equivalent beam that deflects under shear and moment can be worked out from structural analysis principles. The beams are connected together to form a three-dimensional model of the mast or an entire structure. That model may be analyzed with any three-dimensional finite element program. If large deflections are expected, a second-order (geometrically nonlinear) analysis should be used (Peyrot 1985). Once the axial loads, shears, and moments are determined in each equivalent beam, they can be converted into axial loads in the members that make up the beams.

REFERENCES AND BIBLIOGRAPHY

References

BPA Tower Analysis Design (1987) Bonneville Power Administration, Portland, Oreg.

Guidelines for Transmission Line Structural Loading (1984). Commit. on Elect. Trans. Struct. of Commit. on Analy. and Design of Struc. of Struct. Div. ASCE.

Kravitz, R. A. (1982). "Transmission line tower analysis and design in review." *Paper 82 WM 204-6*, IEEE Power Engr. Soc., Winter Meeting, New York, N.Y.

Long, L. W. (1974). "Analysis of seismic effects on transmission structures." *IEEE Trans. Power Appar. Sys.* PAS-93 (1), 248-254.

Marjerrison, M. (1968). "Electric transmission tower design." *J. of the Power Division*, ASCE, 94 (P01), 1-23.

Mueller, W. H., Prickett, S. L., and Kempner, L. (1985). "Nonlinear analysis and full scale test of a transmission tower." Bonneville Power Administration.

Peyrot, A. H. (1985). "Microcomputer based nonlinear structural analysis of transmission line systems." *IEEE Trans. Power Appar. Sys.* PAS-104 (11).

Rossow, E. C., Lo, D. L. C. and Chu, S-L. (1975). "Efficient design analysis of physically nonlinear trusses." *J. of the Structural Division*, ASCE, 101 (ST4), 839-853.

Roy, S., Fang, S-J., and Rossow, E. C. (1984). "Secondary stresses on transmission tower structures." *J. Energy Engr.*, ASCE, 110 (2), 157-172.

Zar, M., and Arena, J. R. (1979). "Towers and transmission pole structures." *Structural engineering handbook, Second Ed.*, E. H. Gaylord and C. N. Gaylord, eds. McGraw-Hill Book Company, New York, N.Y.

Bibliography

Beck, C. F. (1971). "Computer's role in transmission line design." *J. of the Structural Division*, ASCE, 97 (ST1). 63-79.

Beck, C. F., and Zar, M. (1966). "Computer analysis of towers verified by testing." *J. of the Structural Division*, ASCE, 92 (ST6), 361-384.

Fang, S-J., Rossow, E. C., and Roy, S. (1979). "Design and analysis of guyed transmission towers by computer." *Proc. 7th IEEE/PES Transmission and Distribution Conf. and Exposition*, 510-518.

Hanna, A. W. G., and Redwood, R. G. (1973). "Transmission towers under torsional loads." *J. of the Power Division*, ASCE, 99 (P01), 105-123.

Kempner, L., and Smith, S. (1984). "Cross-rope transmission tower–line dynamic analysis." *J. Struct. Engr.*, ASCE, 110 (6), 1321-1335.

Lee, J. W., and Jensen, H. G. (1980). "Transmission tower limit analysis and design by linear programming." *Paper 80 SM 681-7*, IEEE Power Engr. Soc., Summer Meeting, Minneapolis, Minn.

Lo, D. L. C., Morcos, A., and Goel, S. K. (1975). "Use of computers in transmission tower design." *J. Structural Division*, ASCE, 101 (ST7), 1443-1453.

Martin, D. A., and Rouits, J. P. (1970). "Computer calculations for the design of tower members for H.V. transmission lines." *Paper 70 CP 620-PWR*, IEEE Power Group, Summer Meeting, Los Angeles, Calif.

Palmer, A. H. (1967). "Compact analysis for tower structures." *J. of the Power Division*, ASCE, 93 (P01), 1-13.

Peyrot, A. H., and Goulois, A. M. (1978). "Analysis of flexible transmission lines." *J. of the Structural Division*, ASCE, 104 (ST5), 763-779.

Peyrot, A. H., Lee J. W., and Jensen H. G. (1981). "Application of cable elements concept to a transmission line with cross rope suspension structures." *Paper 81 WM 213-8*, IEEE Power Engr. Soc., Winter Meeting, Atlanta, Ga.

Chapter 4

DESIGN OF MEMBERS

4.1 INTRODUCTION

The provisions of this chapter are intended to apply to the design of hot-rolled and cold-formed members.

4.2 MATERIAL

Material conforming to the following standard specifications, the latest date of issue, is suitable for use under this Manual:

ASTM A36,	Structural Steel
ASTM A242,	High-Strength Low-Alloy Structural Steel
ASTM A441,	High-Strength Low-Alloy Structural Manganese Vanadium Steel
ASTM A529,	Structural Steel with 42,000 psi Minimum Yield Point
ASTM A570,	Hot-Rolled Carbon Steel Sheet and Strip, Structural Quality
ASTM A572,	High-Strength Low-Alloy Columbium–Vanadium Steels of Structural Quality
ASTM A588,	High-Strength Low-Alloy Structural Steel with 50,000 psi Minimum Yield Point to 4 in. Thick
ASTM A606,	Steel Sheet and Strip, Hot-Rolled and Cold-Rolled, High-Strength Low-Alloy, with Improved Corrosion Resistance
ASTM A607,	Steel Sheet and Strip, Hot-Rolled and Cold-Rolled, High-Strength Low-Alloy, Columbium and/or Vanadium
ASTM A715,	Sheet Steel and Strip, Hot-Rolled, High-Strength, Low-Alloy, with Improved Formability

4.3 MINIMUM SIZES

Minimum thicknesses of 1/8 in. for members and 3/16 in. for connection plates are suggested. See Section 9.2.4 for steel exposed to corrosion at the ground line.

4.4 SLENDERNESS RATIOS

Limiting slenderness ratios for members carrying calculated compressive stress shall be leg members: $L/r \leq 150$; other members: $KL/r \leq 200$. The slenderness ratio KL/r for redundant members shall not exceed 250. The slenderness ratio L/r for tension-only members detailed with draw shall not exceed 500. (See the Commentary on Chapter 4 for hangers.)

4.5 PROPERTIES OF SECTIONS

Section properties, such as area, moment of inertia, radius of gyration, section modulus, etc., shall be based on the gross cross section except where a reduced cross section or a net cross section is specified. The reduced cross section shall consist of all fully effective elements plus those whose widths must be considered reduced in accordance with Section 4.9.3. If all elements are fully effective the reduced cross section and the gross cross section are identical. Net cross section is defined in Section 4.10.1.

4.6 ALLOWABLE COMPRESSION

The allowable compression stress F_a on the gross cross-sectional area, or on the reduced area where specified, of axially loaded compression members shall be

$$F_a = \left[1 - \frac{1}{2}\left(\frac{KL/r}{C_c}\right)^2\right]F_y; \qquad \frac{KL}{r} \leq C_c \tag{4.6-1}$$

$$F_a = \frac{286{,}000}{\left(\frac{KL}{r}\right)^2}; \qquad \frac{KL}{r} \geq C_c \tag{4.6-2}$$

$$C_c = \sqrt[\pi]{\frac{2E}{F_y}} \tag{4.6-3}$$

where F_y = minimum guaranteed yield stress (ksi); E = modulus of elasticity = 29,000 ksi; L = unbraced length (in.); r = radius of gyration (in.); and K = effective length coefficient.

4.7 COMPRESSION MEMBERS: ANGLES

The provisions of this section are applicable only for 90° angles. If the angle legs are closed, as in a 60° angle, the provisions of Section 4.9 shall be followed.

4.7.1 Maximum w/t Ratio

The ratio w/t, where w = flat width and t = thickness of leg, shall not exceed 25; see Fig. 4C.2 in the Commentary on Chapter 4.

4.7.2 Allowable Compressive Stress

The allowable compressive stress on the gross cross-sectional area shall be the value of F_a according to Section 4.6, provided the largest value of w/t does not exceed the limiting value given by Eq. 4.7–1.

4.7.3 Determination of F_{cr}

If w/t as defined in Section 4.7.1 exceeds $(w/t)_{lim}$ given by

$$\left(\frac{w}{t}\right)_{lim} = \frac{80}{\sqrt{F_y}} \qquad (4.7\text{–}1)$$

the allowable stress F_a shall be the value according to Section 4.6 with F_y in Eqs. 4.6–1 and 4.6–3 replaced with F_{cr} given by

$$F_{cr} = \left[1.677 - 0.677\frac{w/t}{(w/t)_{lim}}\right]F_y; \qquad \left(\frac{w}{t}\right)_{lim} \le \frac{w}{t} \le \frac{144}{\sqrt{F_y}} \qquad (4.7\text{–}2)$$

$$F_{cr} = \frac{9500}{(w/t)^2}; \qquad \frac{w}{t} \le \frac{144}{\sqrt{F_y}} \qquad (4.7\text{–}3)$$

4.7.4 Effective Lengths

4.7.4.1 Leg Members

For leg members bolted in both faces at connections,

$$\frac{KL}{r} = \frac{L}{r}; \qquad 0 \le \frac{L}{r} \le 150 \qquad (4.7\text{–}4)$$

4.7.4.2 Other Compression Members

For members with a concentric load at both ends of the unsupported panel,

$$\frac{KL}{r} = \frac{L}{r}; \qquad 0 \le \frac{L}{r} \le 120 \qquad (4.7\text{–}5)$$

For members with a concentric load at one end and normal framing eccentricity at the other end of the unsupported panel,

$$\frac{KL}{r} = 30 + 0.75\frac{L}{r}; \qquad 0 \le \frac{L}{r} \le 120 \qquad (4.7\text{–}6)$$

For members with normal framing eccentricities at both ends of the unsupported panel,

$$\frac{KL}{r} = 60 + 0.5\frac{L}{r}; \qquad 0 \le \frac{L}{r} \le 120 \qquad (4.7\text{–}7)$$

For members unrestrained against rotation at both ends of the unsupported panel,

$$\frac{KL}{r} = \frac{L}{r}; \qquad 120 \le \frac{L}{r} \le 200 \qquad (4.7\text{–}8)$$

For members partially restrained against rotation at one end of the unsupported panel,

$$\frac{KL}{r} = 28.6 + 0.762\frac{L}{r}; \qquad 120 \le \frac{L}{r} \le 225 \qquad (4.7\text{–}9)$$

For members partially restrained against rotation at both ends of the unsupported panel,

$$\frac{KL}{r} = 46.2 + 0.615\frac{L}{r}; \qquad 120 \le \frac{L}{r} \le 250 \qquad (4.7\text{–}10)$$

4.7.4.3 Redundant Members

$$\frac{KL}{r} = \frac{L}{r}; \qquad 0 \le \frac{L}{r} \le 120 \qquad (4.7\text{–}11)$$

If members are unrestrained against rotation at both ends of the unsupported panel,

$$\frac{KL}{r} = \frac{L}{r}; \qquad 120 \leq \frac{L}{r} \leq 250 \qquad (4.7\text{-}12)$$

If members are partially restrained against rotation at one end of the unsupported panel,

$$\frac{KL}{r} = 28.6 + 0.762\frac{L}{r}; \quad 120 \leq \frac{L}{r} \leq 290 \qquad (4.7\text{-}13)$$

If members are partially restrained against rotation at both ends of the unsupported panel,

$$\frac{KL}{r} = 46.2 + 0.615\frac{L}{r}; \quad 120 \leq \frac{L}{r} \leq 330 \qquad (4.7\text{-}14)$$

4.7.4.4 Joint Restraint

A single bolt connection at either the end of a member or a point of intermediate support shall not be considered as furnishing restraint against rotation. A multiple bolt connection, detailed to minimize eccentricity, shall be considered to offer partial restraint if the connection is to a member capable of resisting rotation of the joint.

4.7.4.5 Test Verification

Where tests and/or analysis demonstrate that specific details provide restraint different from the recommendations of this section, the values of KL/r specified in this section may be modified.

4.8 COMPRESSION MEMBERS: SYMMETRICAL LIPPED ANGLES

4.8.1 Maximum w/t Ratio

The ratio w/t of the leg shall not exceed 60; see Fig. 4C.2 in the Commentary on Chapter 4.

4.8.2 Allowable Compression Stress

The allowable compressive stress on the gross cross-sectional area shall be the value of F_a according to Section 4.6, provided the width-to-thickness ratio of the leg $w/t \leq 220/\sqrt{F_y}$. If w/t exceeds $220/\sqrt{F_y}$, the design shall be based on a reduced area according to Sections 4.5 and 4.9.3.1.b.

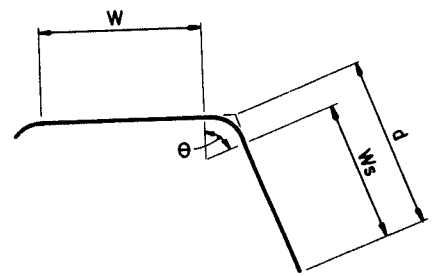

FIG. 4.1—Minimum lip depth

4.8.3 Equivalent Radius of Gyration

The allowable stress defined in Section 4.8.2 shall be computed for the larger of KL/r_z and KL/r_{tf}, where r_{tf} is an equivalent radius of gyration given by

$$\frac{2}{r_{tf}^2} = \frac{1}{r_t^2} + \frac{1}{r_u^2} + \sqrt{\left(\frac{1}{r_t^2} - \frac{1}{r_u^2}\right)^2 + 4\left(\frac{u_o}{r_t\, r_u\, r_{ps}}\right)^2} \qquad (4.8\text{-}1)$$

where

$$r_t = \sqrt{\frac{C_w + 0.04J(K_tL)^2}{I_{ps}}} \qquad (4.8\text{-}2)$$

C_w = warping constant; J = St. Venant torsion constant; K_t = effective length coefficient for warping restraint; L = unbraced length of member; r_u = radius of gyration about u-axis; u_o = distance between shear center and centroid; $r_{ps} = \sqrt{I_{ps}/A}$ = polar radius of gyration about shear center; $I_{ps} = I_u + I_z + Au_o^2$ = polar moment of inertia about shear center; I_u = moment of inertia about u-axis; I_z = moment of inertia about z-axis; and A = area of cross section.

Values of K and KL/r shall be taken as defined in Section 4.7.4, using $K_t = 1$ in Eq. 4.8-2.

4.8.4 Minimum Lip Depth

The minimum depth, d, of a lip at the angle Θ with the leg (Fig. 4.1) shall be determined by

$$d = \frac{2.8t}{(\sin\Theta)^{2/3}}\sqrt[6]{\left(\frac{w}{t}\right)^2 - \frac{4000}{F_y}} \geq \frac{4.8t}{(\sin\Theta)^{2/3}} \qquad (4.8\text{-}3)$$

where w/t = flat width-to-thickness ratio of the leg.

The ratio w_s/t of the lip shall not exceed $72/\sqrt{F_y}$; see Fig. 4.1.

4.9 COMPRESSION MEMBERS NOT COVERED IN SECTIONS 4.7 AND 4.8

4.9.1 Allowable Compressive Stress

The allowable compressive stress on the gross cross-sectional area, or on the reduced area defined in Section 4.5 if w/t for any element exceeds the limit in Section 4.9.3.1 for which $b = w$, shall be the value of F_a according to Section 4.6. Radii of gyration used to determine F_a shall be computed for the gross cross section, and limiting values of w/t and the effective widths of elements defined in Section 4.9.3.1 shall be determined with $f = F_a$.

If a reduced area applies and the force P does not act at the center of gravity of the reduced area, the resulting moment shall be taken into account according to Section 4.12.

4.9.2 Maximum w/t Ratios

The ratio w/t of flat width to thickness shall not exceed 60 for elements supported on both longitudinal edges and 25 for elements supported on only one longitudinal edge; see Fig. 4C.2 in the Commentary on Chapter 4.

4.9.3 Effective Widths of Elements in Compression

4.9.3.1 Uniformly Compressed Elements

a. The effective width b of an element supported on only one longitudinal edge shall be taken as follows:

$$b = w; \qquad \frac{w}{t} \leq \frac{72}{\sqrt{f}} \qquad (4.9\text{-}1)$$

$$b = \frac{108}{\sqrt{f}}\left(1 - \frac{24}{\left(\frac{w}{t}\right)\sqrt{f}}\right) t; \qquad \frac{w}{t} > \frac{72}{\sqrt{f}} \qquad (4.9\text{-}2)$$

where f = compressive stress, in ksi, in an element computed for compression members as prescribed in Section 4.9.1 and for members in bending in Section 4.14.1. The effective width shall be taken adjacent to the supported edge.

b. The effective width b of an element supported on both longitudinal edges shall be taken as follows:

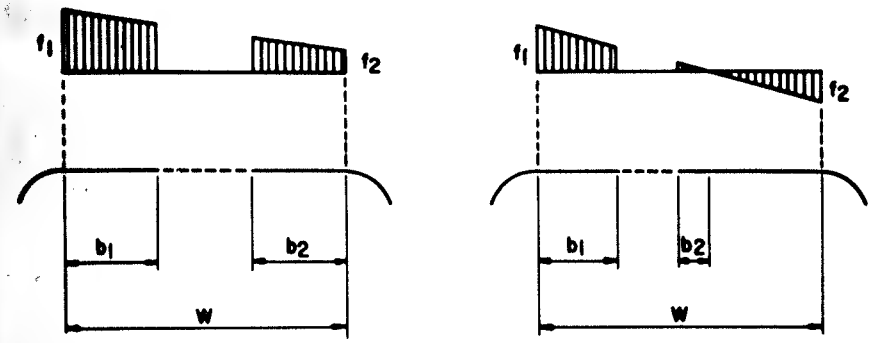

FIG. 4.2—Elements with stress gradient

$$b = w; \qquad \frac{w}{t} \leq \frac{220}{\sqrt{f}} \qquad (4.9\text{-}3)$$

$$b = \frac{325}{\sqrt{f}}\left(1 - \frac{71}{\left(\frac{w}{t}\right)\sqrt{f}}\right) t; \qquad \frac{w}{t} > \frac{220}{\sqrt{f}} \qquad (4.9\text{-}4)$$

except that for flanges of square and rectangular sections,

$$b = w; \qquad \frac{w}{t} \leq \frac{240}{\sqrt{f}} \qquad (4.9\text{-}5)$$

$$b = \frac{325}{\sqrt{f}}\left(1 - \frac{63}{\left(\frac{w}{t}\right)\sqrt{f}}\right) t; \qquad \frac{w}{t} > \frac{240}{\sqrt{f}} \qquad (4.9\text{-}6)$$

where f = compressive stress, in ksi, in an element computed for compression members as prescribed in Section 4.9.1 and for members in bending in Section 4.14.1. The portion of the element considered removed to obtain the effective width shall be taken symmetrically about the centerline.

4.9.3.2 Elements with Stress Gradient

a. The effective width b of an element supported on only one longitudinal edge shall be determined as in Section 4.9.3.1.a, using for f the maximum compressive stress in the element.

b. The effective widths b_1 and b_2 (Fig. 4.2) of an element supported on both longitudinal edges shall be determined as follows:

$$b_2 = \frac{w}{2}; \qquad \frac{w}{t} \leq \frac{110\,C}{\sqrt{f_1}} \qquad (4.9\text{-}7)$$

$$b_2 = \frac{82\,C}{\sqrt{f_1}}\left\{1 - \frac{36\,C}{\left(\frac{w}{t}\right)\sqrt{f_1}}\right\} t; \qquad \frac{w}{t} > \frac{110\,C}{\sqrt{f_1}} \tag{4.9-8}$$

$$b_1 = \frac{b_2}{1.5 - 0.5\,f_2/f_1} \tag{4.9-9}$$

where $C = 2 + 0.75\,(1 - f_2/f_1)^2$; f_1 = compressive stress shown in Fig. 4.2, to be taken positive; f_2 = stress shown in Fig. 4.2, positive indicates compression, negative indicates tension.

The stresses f_1 and f_2 shall be based on the reduced section, and f_1 shall be the larger if f_2 is compressive. If the sum of the calculated values of b_1 and b_2 exceeds the compressive part of the element, the element is fully effective.

4.9.4 Doubly Symmetric Open Cross Sections

Members with doubly symmetric open cross sections whose unsupported length for torsional buckling exceeds the unsupported length for flexural buckling about the weak axis shall be checked for torsional buckling as well as for flexural buckling. The allowable torsional-buckling stress is the value of F_a according to Section 4.6, using the radius of gyration r_t of Eq. 4.8–2 computed for the gross cross section.*

4.9.5 Singly Symmetric Open Cross Sections

Members with singly symmetric open cross sections shall be checked for flexural buckling in the plane of symmetry and for torsional-flexural buckling. The allowable torsional-flexural buckling stress is the value of F_a according to Section 4.6, using the radius of gyration r_{tf} of Eq. 4.8–1 computed for the gross cross section.*

4.9.6 Point-Symmetric Cross Sections

Members with point-symmetric open cross sections shall be checked for torsional buckling as well as flexural buckling. The allowable torsional-flexural buckling stress is the value of F_a according to Section 4.6, using the radius of gyration r_t of Eq. 4.8–2 computed for the gross cross section.*

* Note that r_t and r_{tf} refer to the principal axes (u, z) of angles. See Section 4C.9.3 in the Commentary on Chapter 4 for conversion to principal axes of other shapes.

4.9.7 Closed Cross Sections

Members with closed cross sections need to be investigated only for flexural buckling.

4.9.8 Nonsymmetric Cross Sections

The allowable compressive stress for nonsymmetric shapes shall be determined by tests and/or analysis. See the Commentary on Chapter 4.

4.9.9 Lips

Element lips shall be dimensioned according to Section 4.8.4.

4.9.10 Eccentric Connections

If the centers of gravity of the member connections cannot be made coincident with the center of gravity of the member cross section, either gross or reduced as applicable, the resulting bending stresses shall be taken into account according to Section 4.12.

4.10 TENSION MEMBERS

4.10.1 Allowable Tensile Stress

The allowable tensile stress F_t on concentrically loaded tension members shall be F_y on the net cross-sectional area A_n, where A_n is the gross cross-sectional area A_g (the sum of the products of the thickness and the gross width of each element as measured normal to the axis of the member) minus the loss due to holes or other openings at the section being investigated. If there is a chain of holes in a diagonal or zigzag line, the net width of an element shall be determined by deducting from the gross width the sum of the diameters of all the holes in the chain and adding for each gage space in the chain the quantity $s^2/4g$, where s = longitudinal spacing (pitch) and g = transverse spacing (gage) of any two consecutive holes. The critical net cross-sectional area A_n is obtained from that chain which gives the least net width.

Plain and lipped angles bolted in both legs at both ends may be considered to be concentrically loaded.

4.10.2 Angle Members

The allowable tensile stress F_t on the net area of plain and lipped angles connected by one leg shall be $0.9F_y$. If the legs are unequal and the short leg is connected, the unconnected leg shall be considered to be

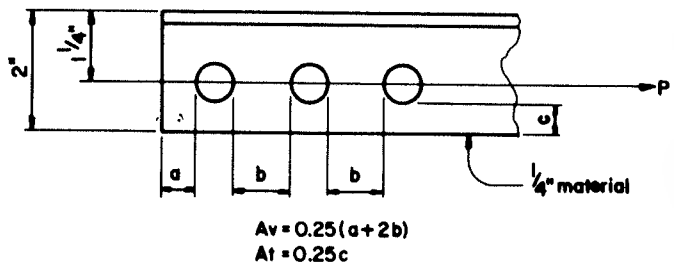

FIG. 4.3—Block shear determination

the same size as the connected leg. If the centroid of the bolt pattern is not located between the heel of the angle and the centerline of the connected leg, the connection shall be checked for block shear by:

$$P = F_u(0.62\,A_v + A_t) \tag{4.10-1}$$

where P = allowable tensile force on connection; F_u = specified minimum tensile strength of the member (ksi); A_v = minimum net area in shear along a line of transmitted force (sq. in.); and A_t = minimum net area in tension from the hole to the toe of the angle perpendicular to the line of force (sq. in.); see Fig. 4.3.

4.10.3 Eccentric Connections

Eccentricity of load on angle members is provided for in Sections 4.10.1 and 4.10.2. Other members subjected to both axial tension and bending shall be proportioned according to Section 4.13.

4.10.4 Threaded Rods and Anchor Bolts

Threaded-rod members shall have a minimum guaranteed yield F_y. The allowable tensile stress F_t on the stress area A_s shall be F_y. A_s is given by

$$A_s = \frac{\pi}{4}\left(d - \frac{0.974}{n}\right)^2 \tag{4.10-2}$$

where d = nominal diameter and n = number of threads per in.

Anchor bolts shall have a minimum guaranteed yield F_y. See Sections 5.3.2, 5.3.3, 5.3.4, and Chapter 9 for design requirements.

4.10.5 Guys

The allowable tensile load in guys shall not exceed 0.65 times the specified minimum breaking strength of the cable. See the Commentary on Chapter 4 for recommendations on stretch of cables.

4.11 STITCH BOLTS

Stitch bolts shall be spaced so that the governing slenderness ratio between bolts for any component of the built-up member does not exceed the following:

For compression members: three quarters of the governing slenderness ratio of the built-up member.

For tension members: the governing slenderness ratio of the built-up member or 300.

If the connected leg of a compression member exceeds 4 in., a minimum of two bolts shall be used at each stitch point.

4.12 AXIAL COMPRESSION AND BENDING

Eccentricity of load on angle members is provided for in Sections 4.7.4.2 and 4.8.4. Other members subjected to both axial compression and bending shall be proportioned to satisfy the following formula:

$$\frac{P}{P_a} + \frac{M_x}{M_{ax}}\frac{1}{1 - P/P_{ex}} + \frac{M_y}{M_{ay}}\frac{1}{1 - P/P_{ey}} \leq 1 \tag{4.12-1}$$

where P = axial compression; P_a = allowable axial compression according to Section 4.9; $P_{ex} = \pi^2 EI_x/(K_xL_x)^2$; $P_{ey} = \pi^2 EI_y/(K_yL_y)^2$; I_x = moment of inertia about x-axis; I_y = moment of inertia about y-axis; K_xL_x and K_yL_y = the effective lengths in the corresponding planes of bending; M_x and M_y = the moments about the x- and y-axes, respectively; and M_{ax} and M_{ay} = the corresponding allowable moments according to Section 4.14.

4.13 AXIAL TENSION AND BENDING

Eccentricity of load on angle members is provided for in Sections 4.10.1 and 4.10.2. Other members subjected to both axial tension and bending shall be proportioned to satisfy the following formula:

$$\frac{P}{P_a} + \frac{M_x}{M_{ax}} + \frac{M_y}{M_{ay}} \leq 1 \tag{4.13-1}$$

where P_a = axial tension; P_a = allowable axial tension according to Section 4.10; M_x and M_y = the moments about the x- and y-axes, respectively; and M_{ax} and M_{ay} = the corresponding allowable moments according to Section 4.14.

4.14 BEAMS

4.14.1 Properties of Sections

Allowable bending moments shall be determined by multiplying allowable bending stresses F_b prescribed in the following sections by the section modulus of the gross cross section or of the reduced section defined in Section 4.5 as applicable. Radii of gyration used to determine the value of F_b for the extreme fiber in compression shall be based on the gross cross section. Effective widths of section elements shall be determined as prescribed in Section 4.9.3, using for f the stress on the element based on the allowable moment previously defined. Limiting values of w/t shall be those given in Section 4.9.2.

4.14.2 Allowable Tension

The allowable bending stress F_b on the extreme fiber in tension shall be F_y.

4.14.3 Laterally Supported Beams

The allowable bending stress F_b on the extreme fiber in compression for members supported against lateral buckling shall be F_y.

4.14.4 I, Channel and Cruciform Sections

The allowable bending stress F_b on the extreme fiber in compression for doubly symmetric I sections, singly symmetric channels, and singly or doubly symmetric cruciform sections in bending about the x-axis (the x-axis is to be taken perpendicular to the web of the I and channel, but may be either principal axis for the cruciform) and not supported against lateral buckling, shall be the value of F_a according to Section 4.6 with $K = \sqrt{K_y K_t}$ and r given by:

$$r^2 = \frac{\sqrt{I_y}}{C_m S_x}\sqrt{C_w + 0.04J(K_t L)^2} \qquad (4.14\text{–}1)$$

where K_y = effective-length coefficient for y-axis bending; K_t = effective-length coefficient for warping restraint; I_y = moment of inertia about y-axis; S_x = x-axis section modulus; C_w = warping constant*; J = St. Venant torsion constant; and L = unbraced length.

For simply supported members with transverse load $C_m = 1$; for members with end moments M_1 and M_2 at the ends of the unbraced length and no transverse load;

$$C_m = 0.6 - 0.4M_1/M_2 \geq 0.4 \qquad (4.14\text{–}2)$$

where M_1 is the smaller moment and M_1/M_2 is positive when the bending is in reverse (S) curvature.

The allowable stress on the extreme fiber in compression for the I section in bending about the y-axis shall be taken equal to F_y; for channels see Section 4.14.7.b.

4.14.5 Other Doubly Symmetric Open Sections

The allowable bending stress F_b on the extreme fiber in compression for laterally unsupported members of doubly symmetric open cross section not covered in Section 4.14.4 shall be the value of F_a according to Section 4.6 determined as follows:

For x-axis bending follow Section 4.14.4 (Eq. 4.14–1).

For y-axis bending follow Section 4.14.4 (Eq. 4.14–1) but with K_x, I_x, and S_y substituted for K_y, I_y, and S_x, respectively.

4.14.6 Singly Symmetric I and T Sections

The allowable bending stress F_b on the extreme fiber in compression for singly symmetric I-shaped members with the compression flange larger than the tension flange and for singly symmetric single web T-shaped members with the flange in compression, in bending about the x-axis (the axis perpendicular to the web) and not supported against lateral buckling, may be taken the same as the value for a section of the same depth with a tension flange the same as the compression flange of the I or the T section. The allowable moment shall be calculated by multiplying the allowable stress so obtained by the compression flange section modulus of the singly symmetric shape.

The allowable bending stress on the extreme fiber in compression for the sections previously described in bending about the y-axis (the axis of symmetry) shall be determined according to Section 4.14.7.a.

* For the I section, $C_w = 0.25d^2I_y$. A good approximation for the channel is $0.15d^2I_y$. For the cruciform section $C_w = 0$. The section depth = d.

4.14.7 Other Singly Symmetric Open Sections

The allowable bending stress F_b on the extreme fiber in compression for members with singly symmetric open cross section and not supported against lateral buckling, other than those covered in Sections 4.14.4 and 4.14.6, shall be the value of F_a determined according to Section 4.6 as follows:

a. For members in bending about the axis of symmetry (the y-axis is to be taken as the axis of symmetry) use $K = \sqrt{K_x K_t}$ and r from Eq. 4.14–1.

b. For members in bending about the x-axis (axis perpendicular to the axis of symmetry), use $K = K_y$ and r given by

$$r^2 = \frac{\sqrt{I_y}}{C_m S_{xc}} \left\{ \pm j\sqrt{I_y} + \sqrt{j^2 I_y + \left[\frac{K_y}{K_t}\right]^2 [c_w + 0.04J(K_t L)^2]} \right\} \quad (4.14\text{–}3)$$

$$j = \left[\frac{1}{2I_x} \int_A (x^2 + y^2)\, x dA\right] - y_o \quad (4.14\text{–}4)$$

where S_{xc} = section modulus of compression flange about x-axis; y_o = distance from centroid to shear center; A = area of cross section; I_y = y-axis moment of inertia; I_x = x-axis moment of inertia; K_y = effective-length coefficient for y-axis bending; and C_m, K_t, C_w, J, and L as defined in Eqs. 4.14–1 and 4.14–2.

The positive direction of the y-axis must be taken so that the shear center coordinate y_o is negative. The plus sign for the term $j\sqrt{I_y}$ in Eq. 4.14–3 is to be used if the moment causes compression on the shear-center side of the x-axis and the minus sign if it causes tension.

4.14.8 Equal Leg Angles

Provided the eccentricity of the load with respect to the shear center is not more than one-half of the leg width (Fig. 4.4), the allowable bending moment for a laterally unsupported equal-leg angle may be taken as the smaller of:

a. The moment M_{yt} that produces tensile yield stress at the extreme fiber, or
b. The moment M_b that causes lateral buckling given by the following:

$$\text{If } M_e \leq 0.5\, M_{yc}\ ; \qquad M_b = M_e \quad (4.14\text{–}5)$$

$$\text{If } M_e \geq 0.5\, M_{yc}\ ; \qquad M_b = M_{yc}\left(1 - \frac{M_{yc}}{4M_e}\right) \quad (4.14\text{–}6)$$

where M_{yc} = moment causing compressive yield at extreme fiber; and M_e = elastic critical moment.

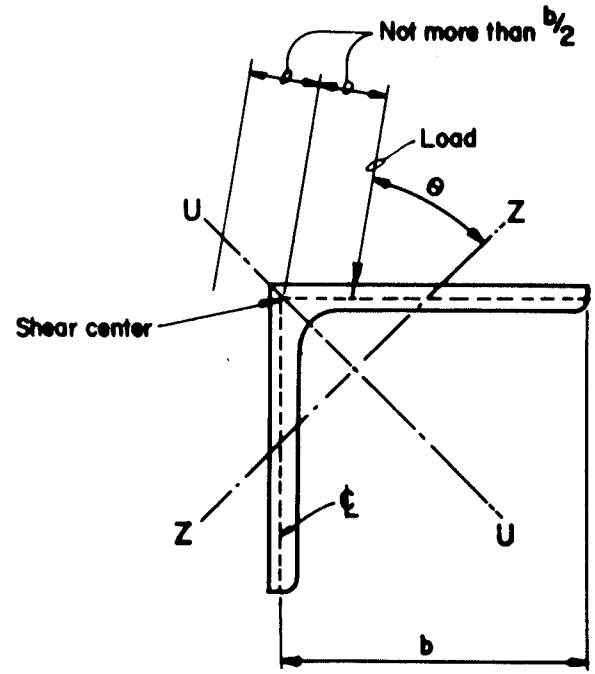

FIG. 4.4—Load on angles

Values of M_e are given by:

For load perpendicular to a leg:

$$M_e = \frac{0.66Eb^4t}{(KL)^2}\left[\sqrt{1 + \frac{0.81\,(KL)^2t^2}{b^4}} \pm 1\right] \quad (4.14\text{–}7)$$

For load at the angle Θ with the z-axis (Fig. 4.4):

$$M_e = \frac{2.33Eb^4t}{(1 + 3\cos^2\Theta)\,(KL)^2}\left[\sqrt{\sin^2\Theta + \frac{0.162\,(1 + 3\cos^2\Theta)(KL)^2t^2}{b^4}} \pm \sin\Theta\right] \quad (4.14\text{–}8)$$

where E = modulus of elasticity (ksi); F_y = yield stress (ksi); b = width of leg - $t/2$ (in.); t = thickness of leg (in.); L = unsupported length (in.); and K = 1 if the angle is simply supported on the x- and y-axes at each end or 0.5 if it is fixed against rotation about the x- and y-axes at each end.

The plus sign for the last term in Eqs. 4.14–7 (±1) and 4.14–8 (±sin Θ) applies when the load acts in the direction shown in Fig. 4.4 and the minus sign applies when it acts in the opposite direction.

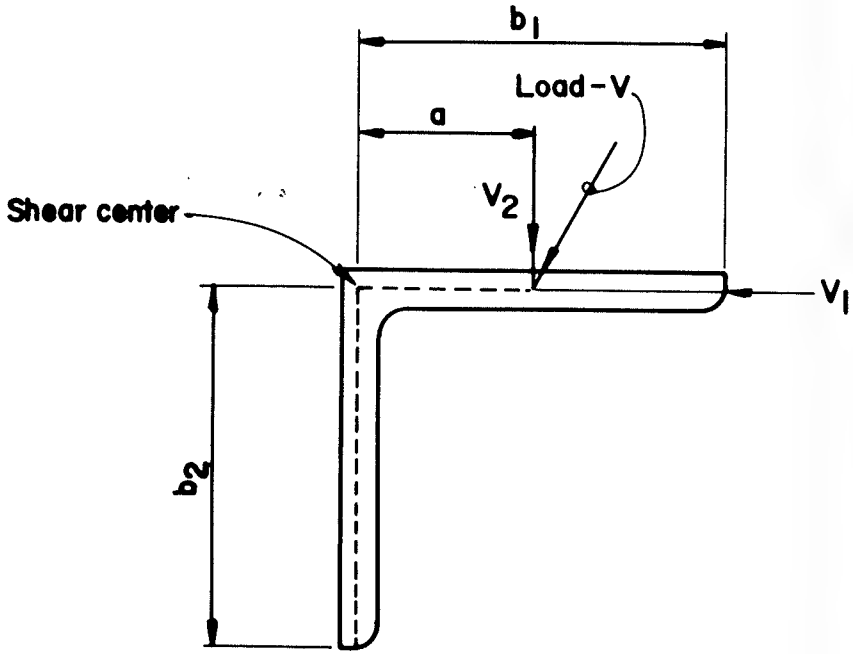

FIG. 4.5—Shear load on angles

The yield moments M_{yt} and M_{yc} are given by M_y in the following:

At the heel of the angle:

$$F_y = \pm \frac{M_y \sin \Theta}{S_z} \tag{4.14-9}$$

At the toes of the angle:

$$F_y = \pm \frac{M_y \sin \Theta}{S_z} \pm \frac{M_y \cos \Theta}{S_u} \tag{4.14-10}$$

where S_u and S_z are section moduli (in.^{3}), for the u- and z-axes, respectively.

The plus sign denotes tension and the minus sign compression. The applicable signs are determined according to the type of stress produced at the extreme fiber being checked. The following section moduli based on centerline dimensions may be used in lieu of those based on overall dimensions:

$$S_u = \frac{b^2 t}{1.5\sqrt{2}}; \qquad S_z = \frac{b^2 t}{3\sqrt{2}} \tag{4.14-11}$$

4.15 ALLOWABLE SHEAR

4.15.1 Beam Webs

The ratio h/t of the depth of a beam web to its thickness shall not exceed 200. The allowable average shearing stress F_v on the gross area of a beam web shall not exceed the following:

$$F_v = 0.58F_y\ ; \qquad \frac{h}{t} \leq \frac{440}{\sqrt{F_y}} \tag{4.15-1}$$

$$F_v = \frac{255\sqrt{F_y}}{h/t}; \qquad \frac{440}{\sqrt{F_y}} \leq \frac{h}{t} \leq \frac{557}{\sqrt{F_y}} \tag{4.15-2}$$

$$F_v = \frac{142{,}000}{(h/t)^2}; \qquad \frac{h}{t} > \frac{557}{\sqrt{F_y}} \tag{4.15-3}$$

where F_y equals yield stress (ksi).

4.15.2 Angles

The shear components V_1 and V_2 of the allowable shear V (kips), on single-angle beams (Fig. 4.5) shall not exceed the value that satisfies the following equations:

$$\frac{3V_1}{2\,b_2 t} + \frac{V_2 at}{J} \leq 0.58F_y \tag{4.15-4}$$

$$V_2\left[\frac{3}{2\,b_2 t} + \frac{at}{J}\right] \leq 0.58F_y \tag{4.15-5}$$

where V_1 = component of V in leg b_1 (kips); V_2 = component of V in leg b_2 (kips); a = distance from shear center to intersection of load plane with leg b_1 (in.); b_1, b_2 = width of leg – $t/2$ (in.); t = thickness of leg (in.); J = St. Venant torsional constant (in.^{4}) = $(b_1 + b_2)t^3/3$; and F_y = yield stress (ksi).

...RY & DOCUMENTATION CENTRE
...SEN & TOUBRO LTD.
...TRUCTION GROUP
...: 979
...POONAMALLEE ROAD
...ANAPAKKAM. MADRAS-600 089.
3466
621.31922
...8

COMMENTARY ON CHAPTER 4

4C.1 INTRODUCTION

This commentary provides guidance for the selection of members. It is intended for use following conventional tower-design procedures in which specified loads are multiplied by overload capacity factors and the members and connections are designed to stresses approaching failure in yielding or buckling. Members are normally treated as axially loaded tension-compression members. Design procedures are included for angles where end connections are not framed concentrically. These procedures are applicable for the small joint eccentricities commonly found in transmission towers and reflect the experience of extensive testing in the laboratory and on full-scale towers.

Additional tests which have been reviewed show that the recommendations are suitable for steels with yield points up to 65 ksi and for width-to-thickness values of 22 for projecting elements, such as angle legs and channel flanges. The recommendations are intended for both hot-rolled and cold-formed members. Recommendations have also been included covering guyed transmission structures.

Test experience may indicate that these recommendations are conservative for specific shapes or connections. Higher values may be used where they are verified by tests, provided the results are adjusted to the ASTM yield and tensile values of the material and for differences between the nominal design dimensions of the member and the actual cross-sectional dimensions of the test specimens. The properties of the material should be determined by tests on standard coupons taken in accordance with the requirements of the AISI Specification (1986).

4C.2 MATERIAL

The listing of suitable steels does not exclude the use of other steels which conform to the chemical and mechanical properties of one of the

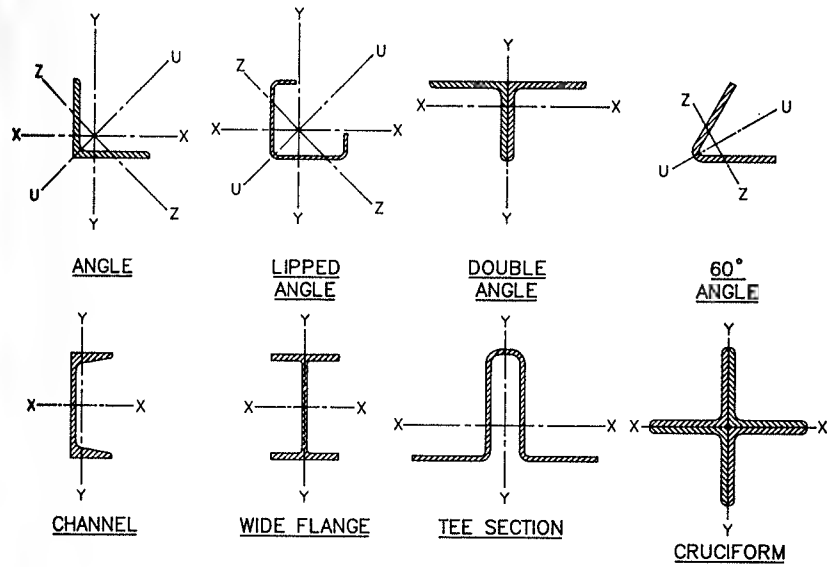

FIG. 4C.1—Some Typical Cross Sections

listed specifications or other published specifications which establish the properties and suitability of the material. A ratio of $F_u/F_y \geq 1.15$ is suggested for steel used for members.

4C.4 SLENDERNESS RATIOS

Damaging vibration of steel members in latticed towers usually occurs at wind speeds less than 20 mph since a nearly constant velocity is required to sustain damaging vibration. Tests on a number of shapes with L/r values of 250 show that the possibility of damaging vibration is minimal (Carpena and Diana 1971; Cassarico et al. 1983). Tension-hanger members are prone to vibration, but L/r values as large as 375 have been used successfully.

In areas of steady winds over extended periods, such as mountain passes or flat plains, allowable L/r values may need to be reduced. Where severe vibration is a concern, careful attention must be given to framing details. The practice of blocking the outstanding leg of angles to facilitate the connection should be avoided.

4C.5 PROPERTIES OF SECTIONS

Typical cross sections are shown in Fig. 4C.1. The x- and y-axes are principal axes for all cross sections shown except the angle, for which

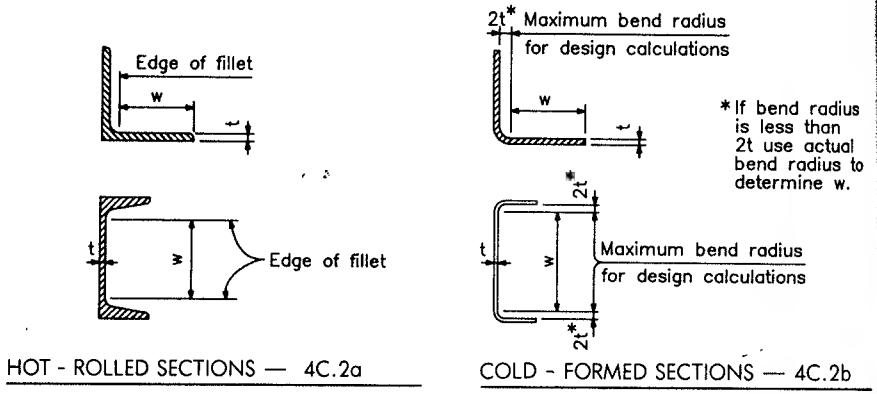

FIG. 4C.2—Determination of w/t *Ratios*

the principal axes are u and z, with u being the axis of symmetry for equal leg angles.

Evaluation of torsional-flexural buckling involves some properties of the cross section which are not encountered in flexural buckling. Procedures for computing the torsional constant J, the warping constant C_w, the shear center, and other properties are given in *Cold-Formed Steel Design Manual* (1968), Timoshenko and Gere (1961), Yu (1986), and other sources.

For cold-formed shapes with small inside-bend radii (twice the thickness), section properties can be determined on the basis of square corners. Equations based on round corners are given in the *Cold-Formed Steel Design Manual* (1968). Normally, the differences in properties based on square or round corners are not significant.

Fig. 4C.2(a) shows the method of determining w/t, the ratio of flat width to thickness of a member element. For hot-rolled sections, w is the distance from the edge of the fillet to the extreme fiber, while for cold-formed members it is the distance shown in Fig. 4C.2(b). A larger bend radius can be used in fabrication, but for design purposes w should be based on a maximum inside-bend radius of two times the element thickness.

4C.6 ALLOWABLE COMPRESSION

The Structural Stability Research Council (SSRC) formula (1978) for the ultimate strength of the centrally loaded column in the inelastic range and the Euler formula in the elastic range are retained in this

edition of the Manual. Test experience on tower members is limited in the range of L/r from 0 to 50, but indications are that the SSRC formula applies equally well in this range if concentric framing details are used.

4C.7 COMPRESSION MEMBERS: ANGLES

A single angle in axial compression can fail by torsional-flexural buckling, which is a combination of torsional buckling and flexural buckling about the u-axis; by z-axis flexural buckling; or by local buckling of the legs. Local buckling and purely torsional buckling are identical if the angle has equal legs and is simply supported and free to warp at each end; furthermore, the critical stress for torsional-flexural buckling is only slightly smaller than the critical stress for purely torsional buckling, and for this reason such members have been customarily checked only for flexural and local buckling.

4C.7.3 Determination of F_{cr}

The ratio w/t of flat width to thickness which enables the leg to reach yield stress without buckling locally has been set at $80/\sqrt{F_y}$. The reduced strength of legs with larger values of w/t is given by Eqs. 4.7-2 and 4.7-3. These differ slightly from the corresponding formulas in the first edition of this Manual. The effect of the reduced local-buckling strength on the flexural-buckling strength is accounted for by substituting the reduced value F_{cr} for F_y in Eqs. 4.6-1 and 4.6-3. Unequal leg angles can be designed following this procedure by establishing the allowable stress based on the w/t value of the long leg. Member strengths computed by this procedure are in very good agreement with test results on both hot-rolled and cold-formed single angle members (Gaylord and Wilhoite 1985).

4C.7.4 Effective Lengths

The recommendations of the 1971 edition of this Manual for angle members have been retained in this edition. These specify K factors which depend upon the connection design for the member. The effective length of leg sections having bolted connections in both legs is assumed to be the actual length ($K = 1$). For other angles in compression, eccentricity of the connection is the predominant factor in the lower L/r range and is accounted for by specifying effective slenderness values KL/r. In the higher L/r range, rotational restraint of the members becomes the predominant factor and is also accounted for by specifying effective slenderness values KL/r. The break point of these factors is taken as $L/r = 120$.

Curves 1 and 4 in Fig. 4C.3 are plots of the basic formulas (Eqs. 4.6-1 and

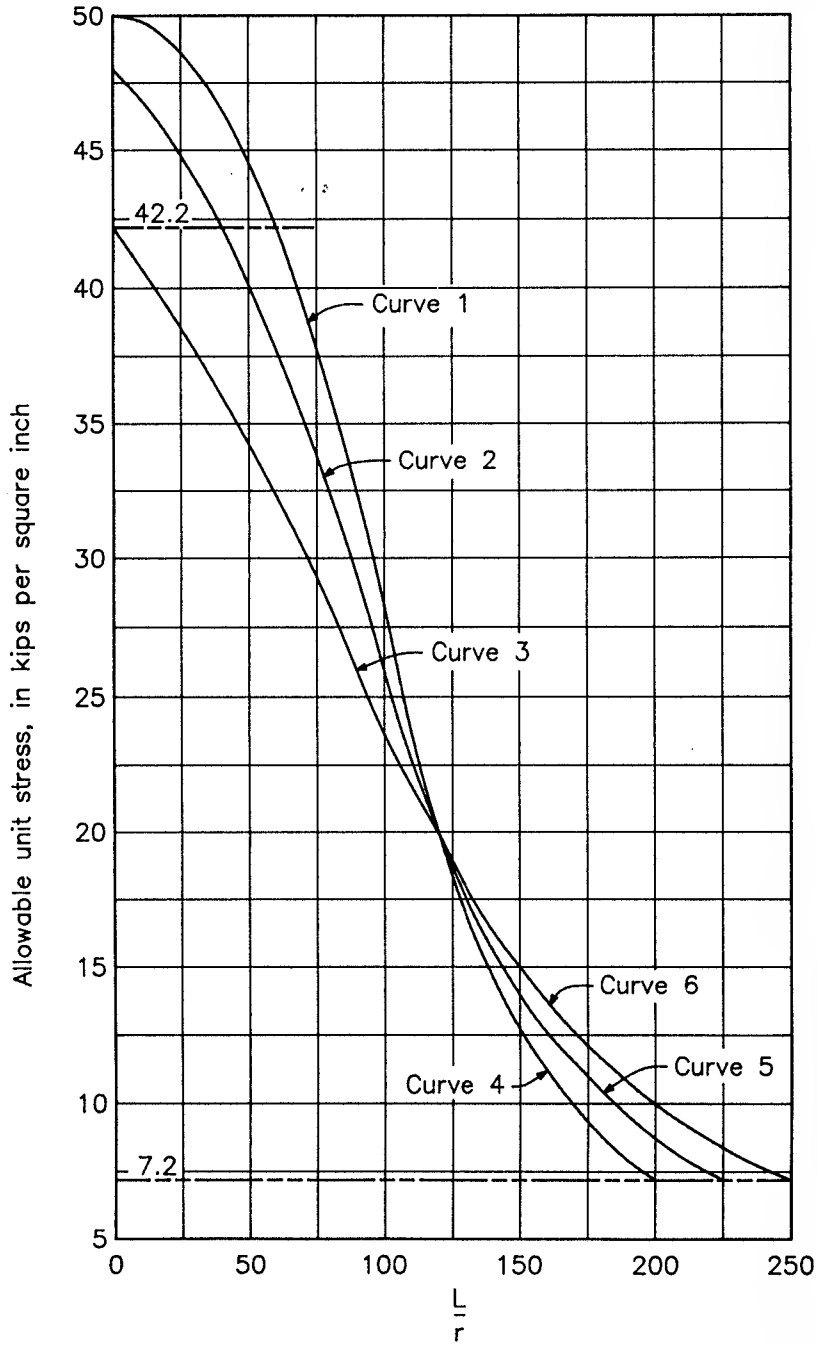

FIG. 4C.3.—Compression Curves for 50 ksi (F_y) Steel

4.6-2) for 50 ksi yield material. Curve 1 is the SSRC formula ($0 \leq L/r \leq C_c$), while Curve 4 is the Euler formula ($L/r \geq C_c$). Curves 2, 3, 5, and 6 are modifications of the basic curves. For Curve 2, which applies to angle members with concentric load at only one end, the allowable stress at $L/r = 0$ equals the Curve 1 stress at $L/r = 30$ (48 ksi). For Curve 3, which applies to members with framing eccentricities at both ends, the allowable stress at $L/r = 0$ equals the Curve 1 stress at $L/r = 60$ (42.2 ksi). Curves 2 and 3 intersect the basic curves at $L/r = 120$. For Curve 5, which applies to members partially restrained against rotation at one end, the allowable stress at $L/r = 225$ is the Curve 4 stress at $L/r = 200$ (7.2 ksi). For Curve 6, which applies to members partially restrained against rotation at both ends, the allowable stress at $L/r = 250$ is the Curve 4 stress at $L/r = 200$. Curves 5 and 6 intersect the basic curves at $L/r = 120$.

The effective-length recommendations are based on a review of formulas that have been used by the tower industry for many years and are supported by the results of laboratory and full-scale tower tests. Values of KL/r to account for partial fixity in members with large slenderness ratios (greater than 120) are based on the AISC Specifications (1978) for bracing members in compression and on tests by the Bureau of Standards (1922). Fig. 4C.4 shows the partial restraint utilized in the AISC formulas for bracing. Test results on angles with one bolt in one leg and on angles with two bolts in one leg correlate closely with this curve. For reference, the Euler curve with a factor of safety of 1.92 and a $K = 1$ is compared to the AISC working-stress curve. A varying K is obtained by comparing the two. A varying K is also obtained by comparing the data in the Bureau of Standards tests with the Euler curve. These relative K values are averaged to provide the values shown in the insert in Fig. 4C.4. As can be seen, the degree of restraint in the end connections is significant in the higher L/r range.

The effective lengths prescribed give results that are in very close agreement with numerous tests on both hot-rolled and cold-formed angles (Gaylord and Wilhoite 1985).

To justify using the values of KL/r corresponding to Curves 5 and 6 of Fig. 4C.3, the following evaluation is suggested:

a. The restrained member must be connected to the restraining member with at least two bolts.
b. The restraining member must have a stiffness factor I/L in the stress plane (I = moment of inertia and L = length) that equals or exceeds the sum of the stiffness factors in the stress plane of the restrained members that are connected to it. An example is shown in Fig. 4C.5.

Angle members connected by one leg should have the centroid of the bolt pattern located as close to the centroid of the angle as practicable. Normal framing eccentricity at load transfer connections implies that the centroid of

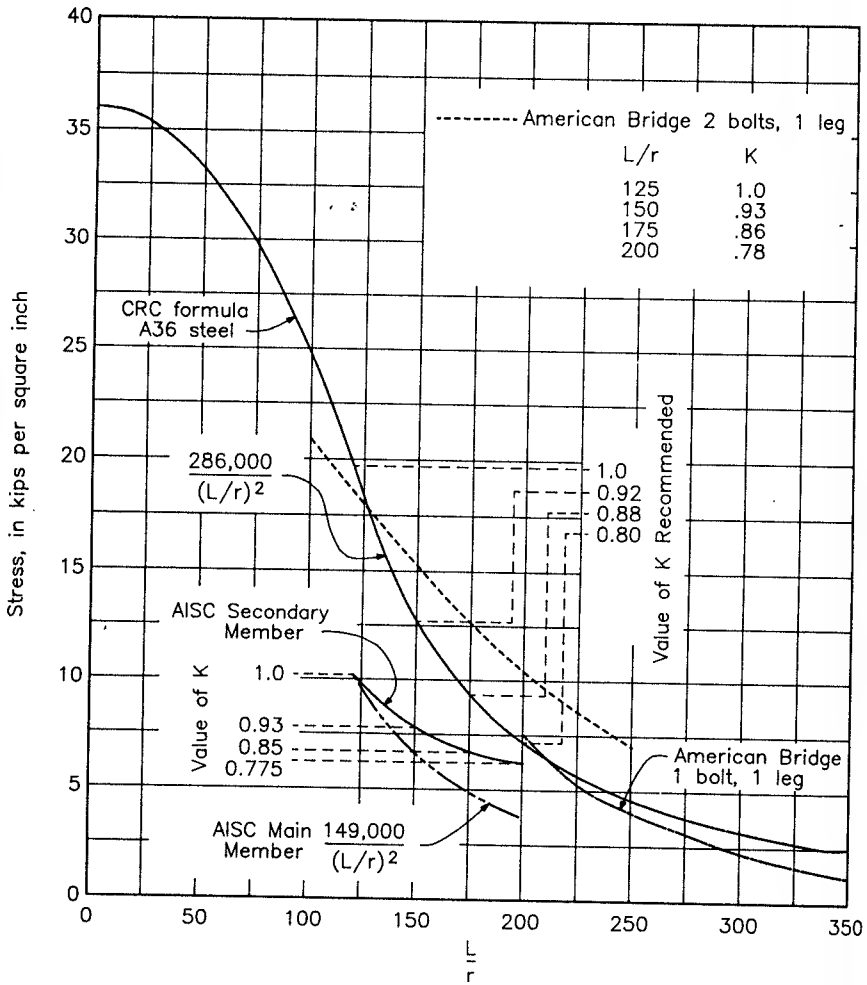

FIG. 4C.4—Partial Restraint used by AISC Bracing Formula

the bolt pattern, except for some of the smaller angle sizes, is located between the centroid of the angle and the center line of the connected leg; when joint eccentricities exceed this criterion due consideration should be given to the additional stresses introduced in the member.

Redundant members provide intermediate support for stressed members. In practice the L/r limitations specified in Section 4.7.4.3 normally ensure that the redundant is adequate to provide support for the stressed member. Studies indicate that the magnitude of the redundant support required is dependant on the initial crookedness and the L/r value of the supported member. The magnitude of the load in the redundant member can vary from 0.5 to 2.5% of the load in the supported member.

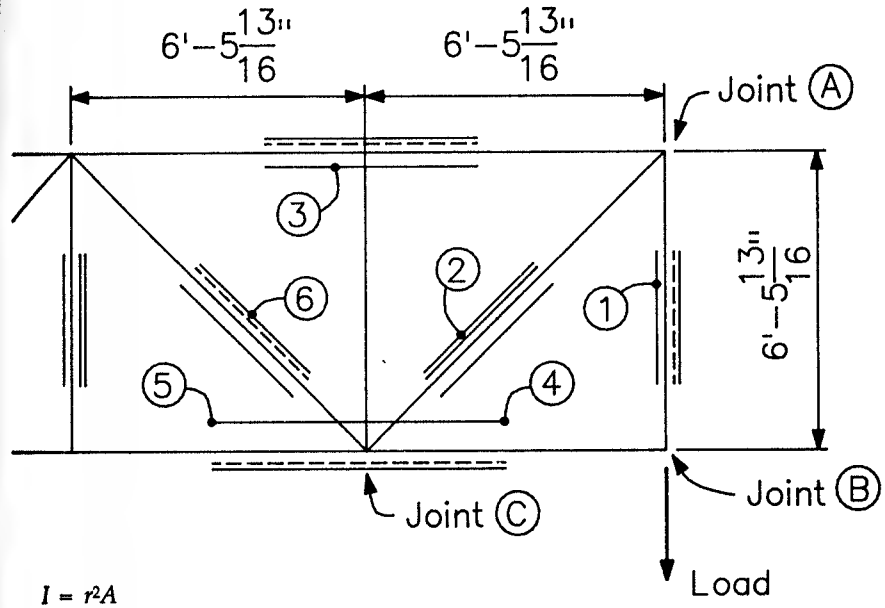

$I = r^2A$

$I/L = \dfrac{rA}{L/r}$

① $L2 \times 2 \times 1/8$—one bolt connection-joint restraint not a consideration.—tension member.

② and ⑥ $L2\frac{1}{2} \times 2\frac{1}{2} \times 3/16$—two bolt connection—$L$ = 110 in.; r_{xx} = 0.778; A = 0.902 sq. in.

$$\frac{rA}{L/r} = \frac{0.778 \times 0.902}{110/0.778} = 0.005 \text{ (in truss plane).}$$

③ $L2\frac{1}{2} \times 2\frac{1}{2} \times 3/16$; L = 155.6 in.; r_{xx} = 0.778; A = 0.902 sq. in.

$$\frac{rA}{L/r} = \frac{0.778 \times 0.902}{155.6/0.778} = 0.004 \text{ (in truss plane).}$$

Joint restraint not a consideration—tension member.

④ and ⑤ $L4 \times 4 \times 1/4$; L = 77.8 in.; r_{xx} = 1.25; A = 1.94 sq. in.

$$\frac{rA}{L/r} = \frac{1.25 \times 1.94}{77.8/1.25} = 0.039 \text{ (in truss plane).}$$

Joint Ⓐ ③ < ② 0.004 < 0.005 No restraint for ②.

Joint Ⓑ Single bolt connection—no restraint.

Joint Ⓒ ④ + ⑤ > ② + ⑥ 2 × 0.039 > 2 × 0.005—Partial restraint for ② and ⑥ at this joint.

Member ②—Partial restraint at one end; r_{zz} = 0.495; (Eq. 4.7-9)

L/r_{zz} = 110/0.495 = 222.2; KL/r_{zz} = 28.6 + 0.762 × 222.2 = 198; member meets requirements of compression member.

FIG. 4C.5—Member Restraint Determination

4C.8 COMPRESSION MEMBERS: SYMMETRICAL LIPPED ANGLES

Lips increase the local buckling strength of the legs of an angle and in some applications show an advantage over plain angles. Since the local buckling strength of the lipped-angle leg is not equivalent to torsional buckling of the angle, torsional-flexural buckling must be considered. The allowable compressive stress for torsional-flexural buckling is determined by using an equivalent radius of gyration r_{tf} (Eq. 4.8–1) in the column allowable stress formulas (Eqs. 4.6–1 and 4.6–2).

The effective-length coefficient in Eqs. 4.6–1, 4.6–2, and 4.8–2 is $K = 1$ if the member is free to warp and rotate at each end. If warping and rotation are prevented at both ends, $K = 0.5$; if warping and rotation are prevented at only one end, $K = 0.7$. Mixed end conditions can be treated by replacing r_t and r_u in Eq. 4.8–1 with r_t/K_t and r_u/K_u and by using K_t in Eq. 4.8–2 where K_t and K_u are the effective-length coefficients for torsional and u-axis buckling, respectively. Eq. 4.8–1 in this form gives the value of K/r_{tf} by which L is multiplied for use in Eqs. 4.6–1 and 4.6–2. However, $K = 1$ should be used in Eq. 4.8–2 when it is used in conjunction with the effective lengths specified in Section 4.7.4. Gaylord and Wilhoite (1985) and Zavelani (1984) provide additional test verifications.

If no intermediate supports exist, the allowable stress is given by Eqs. 4.6–1 and 4.6–2, using for KL/r the largest of KL/r_z, KL/r_t, or KL/r_{tf}. If intermediate supports do exist, the length L used to determine the slenderness ratio depends on the nature of the support, i.e., whether it restrains only flexural buckling, only torsional-flexural buckling, or both.

4C.9 COMPRESSION MEMBERS NOT COVERED IN SECTIONS 4.7 AND 4.8

4C.9.2 Maximum w/t Ratios

Most of the shapes other than angles that are likely to be used in transmission towers will have element slenderness ratios, w/t, small enough to develop a uniform distribution of the stress F_a given by Eqs. 4.6–1 and 4.6–2 over the full cross-sectional area. Where this is not the case, the postbuckling strength of elements which buckle prematurely is taken into account by using an effective width of the element in determining the area of the member cross section. The effective width of an element is the width which gives the same resultant force at a uniformly distributed stress F_a as the nonuniform stress which develops in the entire element in the postbuckled state.

4C.9.3 Effective Widths of Elements in Compression

Effective widths in this section are derived from formulas in Specification for the Design of Cold-Formed Steel Structural Members (1986). Only the effective widths of Section 4.9.3.1 are needed for the uniform stress distribution in axially loaded compression members. Stress gradients (Section 4.9.3.2) occur in members in bending, and effective widths for this case are needed only for beams and eccentrically loaded compression members.

Note that the effective widths for axially loaded members are determined at the allowable stress F_a based on the radius of gyration of the gross cross section, while the allowable force P is obtained by multiplying F_a by the gross area if all elements are fully effective and by the reduced area if the effective widths of the elements are smaller than the actual widths.

The types of buckling that must be checked for axially loaded members with symmetric cross sections are covered in Sections 4.9.4–4.9.7. For members which may be subject to torsional or torsional-flexural buckling, an equivalent radius of gyration, r_t, for doubly symmetric and point symmetric sections and r_{tf} for singly symmetric sections are specified to be used in determining the allowable stress F_a by Eqs. 4.6–1 and 4.6–2. Note that r_{tf} and r_t (Eqs. 4.8–1 and 4.8–2) are referred to the principal axes u and z of angles (Fig. 4C.1). In adjusting the formulas for the x and y principal axes of other sections, remember that u is the axis of symmetry. Therefore, when either the x-axis or the y-axis is the axis of symmetry, it must be substituted for u in Eq. 4.8–1, and also wherever it appears in the list of symbols following Eq. 4.8–2.

4C.9.8 Nonsymmetric Cross Sections

An analysis based on the elastic buckling stress of a nonsymmetric member, which requires the solution of a cubic equation, is suggested in Zavelani and Faggiano (1985). In general, this will give an upper bound to the allowable value. A lower bound can be obtained by proportioning the member so that the maximum combined stress due to the axial load and moment equals the yield stress (Madugula and Ray 1984).

4C.10 TENSION MEMBERS

4C.10.5 Guys

In the analysis of guyed structures, the stretch of the guys can usually be ignored if it does not exceed 0.2% of the length and the length of the guy does not exceed 200 ft.

4C.12 AXIAL COMPRESSION AND BENDING

Eq. 4.12–1 is the same as the corresponding AISC and AISI specification formulas, except that in the AISC specification it is given in terms of axial stress and bending stress instead of force P and moment M. In addition, the coefficient C_m is omitted. For the cases covered in this section, the coefficient C_b in the AISC formula for allowable bending stress is very close to the reciprocal of C_m and is specified to be taken equal to unity when computing allowable moments for the interaction formula in order to avoid applying the correction for nonuniform moment twice. In this Manual, C_m is used in the formulas for allowable moment in Section 4.14 instead of its reciprocal C_b, and because it is *not* to be taken equal to unity in computing values of M_{ax} and M_{ay} used in Eq. 4.12–1, the effect of C_m is automatically included.

Both the AISC and the AISI specifications give an alternate simplified formula which may be used if f_a/F_a is less than 0.15. The simplification consists of dropping the term $1/(1-P/P_e)$ in Eq. 4.12–1. Because this case is likely to be rare in transmission tower work, the corresponding formula is not shown in this Manual.

4C.13 AXIAL TENSION AND BENDING

The terms $1/(1-P/P_e)$ in Eq. 4.12–1 account for the increase in the moments M_x and M_y due to the eccentricity of the compression force P caused by the bending of the member. If the axial force is tension, however, its effect decreases the moments. Therefore, the inclusion of terms in Eq. 4.13–1 for decreasing the moments would be logical. This is not usually done, however, and the resulting simpler formula is used in this Manual.

Note that M_{ax} and M_{ay} are to be determined according to Section 4.14. Therefore, the effects of lateral buckling for members not supported laterally are taken into account even though the lateral-buckling moment is based on a compressive stress. In other words, Eq. 4.13–1 is not based on the addition of axial tension and tensile stresses due to bending. This logic can be seen by considering the case in which P and M_x are both zero. This gives $M_y = M_{ay}$, and if the member is not supported against lateral buckling, M_{ay} should be the lateral-buckling moment.

Eq. 4.13–1 is the same as the corresponding equation in the AISC Load and Resistance Factor Design Specification for Steel Buildings (1986).

4C.14 BEAMS

Formulas in this section for determining allowable moments differ in form from those in the AISC and AISI specifications in that the allowable compressive stress for laterally unsupported members is computed from the allowable-stress formulas for axial compression through the use of an equivalent radius of gyration. Also, instead of the coefficient C_b in the AISC formulas, its reciprocal C_m is used for the reasons discussed in Section 4C.12.

4C.14.4 I, Channel and Cruciform Sections

Eq. 4.14–1, which gives the equivalent radius of gyration for doubly symmetric I's, symmetric channels, and singly or doubly symmetric cruciform sections, takes both the St. Venant torsional stiffness, J, and the warping stiffness, C_w, into account. Two formulas are used in the AISC specification. One is obtained by taking $C_w=0$ and the other by taking $J = 0$ and expressing the results in terms of other more familiar properties of the cross section. The larger of the two allowable stresses so obtained is used because both underestimate the buckling strength due to the omissions just mentioned. The two formulas can be used only for doubly symmetric I's and singly symmetric I's with the compression flange larger than the tension flange. Only one of the two applies to channels. On the other hand, formulas in the AISI specifications are derived by assuming $J = 0$ because it is usually relatively small for thin-walled shapes of cold-formed members. However, with the values of C_w given in the footnote to Section 4.14.4, and with $J = \frac{1}{3}\Sigma bt^3$, Eq. 4.14–1 is not difficult to use, and it has the advantage of giving more accurate values of the buckling stress.

4C.14.6 Singly Symmetric I and T Sections

The approximate procedures for T's and singly symmetric I's give very good results and are used in the AISC specification.

4C.14.7 Other Singly Symmetric Open Sections

The formulas in this section are expressed in different terms from those in the AISI specification. However, they give identical results. Gaylord and Gaylord (1977) illustrate a typical example.

4C.14.8 Equal Leg Angles

The formulas in this section give critical moments for pure bending (constant moment) of equal leg angles and therefore are conservative for cases where there is a moment gradient, as for a uniformly loaded beam.

However, they do not account for twisting of the angle, so they are unconservative if the load does not act through the shear center. Tables of allowable uniformly distributed load perpendicular to a leg, based on formulas that account for twist due to load eccentricity of ± b/2, and which have been confirmed by an extensive series of tests, are available (Madugula and Kennedy 1985; Leigh et al. 1984). The loads are based on an allowable stress of 0.6 F_y in Madugula and Kennedy (1985) and 0.66 F_y in Leigh et al. (1984), so that the tabulated values must be divided by 0.6 and 0.66, respectively, to obtain values in conformity with tower design practice.

Predictions of the formulas in this section for load perpendicular to a leg are in good agreement with the values in Leigh et al. (1984) for beam spans up to $L/r_z = 250$. The tabular values range from about 92% for the relatively thin angles (b/t = 16) to about 115% (b/t about 8) of the formula values using the centerline section moduli of Eq. 4.14–11, and from about 94% to 130% using overall dimension section moduli. The overprediction of the thin angles is partially compensated for by the fact that the formulas give the critical uniform moment. Nevertheless, if the formulas are used for angles with b/t larger than 16, it is suggested that the resulting allowable moments be reduced by 10% if the member is not to be tested.

The tables in Madugula and Kennedy (1985) and Leigh et al. (1984) also give allowable uniform loads for angles with unequal legs.

Deflections may be computed as the resultant of the u- and z-axis deflection components determined by resolving the moment M into the u- and z-axis. There are no established limits of deflection for beams in transmission tower applications.

4C.15 ALLOWABLE SHEAR

4C.15.1 Beam Webs

The upper limit of h/t in the AISC specification is given by a formula involving F_y. The limiting value 200 of this section, which is the same as the AISI specification limit, equals the AISC limit for F_y = 60 ksi and is, therefore, adequate for steels with $F_y \leq 60$. It is unlikely that webs thinner than those allowed by the 200 limit will be needed in transmission towers.

The allowable shearing stresses given here are the same as those in the AISC and AISI specifications multiplied by the AISC and AISI factors of safety.

EXAMPLES

The following examples are included to illustrate the application of these recommendations.

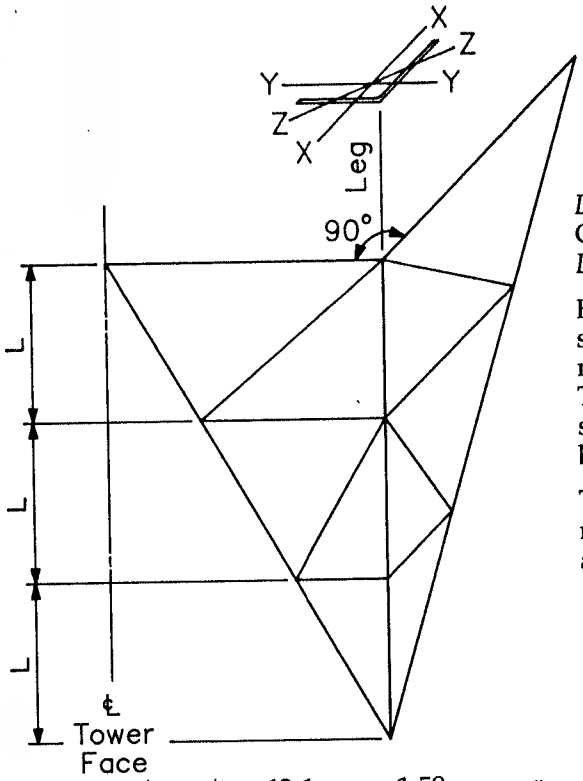

Leg Requirements:

L/r_{zz} critical factor
Concentric loading
L/r_{zz}–Eq. (4.7–4)

Eccentricities at leg splices should be minimized.
The thicker leg sections should be properly butt-spliced.

This method of support minimizes rolling of the angle under load.

$L8 \times 8 \times 9/16$, w/t = 12.1; r_{zz} = 1.59; $r_{xx} = r_{yy}$ = 2.50; A = 8.68 sq. in.

For 36 ksi yield steel; $w/t_{lim} = 80/\sqrt{36}$ = 13.3; L = 121 in.;
L/r_{zz} = 121/1.59 = 76; F_y = 36 ksi.
From Eq. 4.6–1, F_a = 29.5 ksi; Value = 29.5 × 8.68 = 256 kips.

$L8 \times 8 \times 9/16$, w/t = 12.1; r_{zz} = 1.59; $r_{xx} = r_{yy}$ = 2.50; A = 8.68 sq. in.
For 36 ksi yield steel; w/t_{lim} = 13.3; L = 238 in.; L/r_{zz} = 238/1.59 = 150;
F_y = 36 ksi.
From Eq. 4.6–2, F_a = 12.7 ksi; Value = 12.7 × 8.68 = 110 kips.

$L6 \times 6 \times 5/16$; w/t = 16.6; r_{zz} = 1.20; $r_{xx} = r_{yy}$ = 1.89; A = 3.65 sq. in.
For 36 ksi yield steel; w/t_{lim} = 13.3; Allowable F_{cr} = 30.0 ksi.; L = 180 in.;
L/r_{zz} = 180/1.20 = 150.
From Eq. 4.6–2, F_a = 12.7 ksi.; Value = 12.7 × 3.65 = 46.4 kips.

$L8 \times 8 \times 9/16$; w/t = 12.1; r_{zz} = 1.59; $r_{xx} = r_{yy}$ = 2.50; A = 8.68 sq. in.
For 50 ksi yield steel; w/t_{lim} = 11.3; Allowable F_{cr} = 47.6 ksi.; L = 121 in.;
L/r_{zz} = 76.
From Eq. 4.6–1, F_a = 36.2 ksi.; Value = 36.2 × 8.68 = 314 kips.
$L8 \times 8 \times 9/16$ except L = 238 in.; L/r_{zz} = 150.
From Eq. 4.6–2, F_a = 12.7 ksi; Value = 12.7 × 8.68 = 110 kips.

EXAMPLE 1. Angle Leg With Symmetrical Bracing

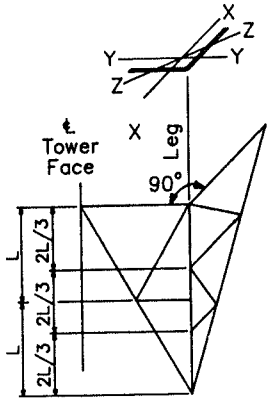

Leg Ⓐ $(2/3L)/r_{zz}$ controls

Leg members should be supported in both faces at the same elevation every four panels.

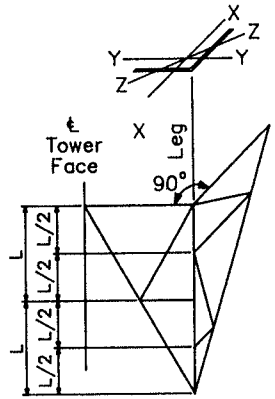

Leg Ⓑ L/r_{xx} controls

Leg members should be supported in both faces at the same elevation every four panels.

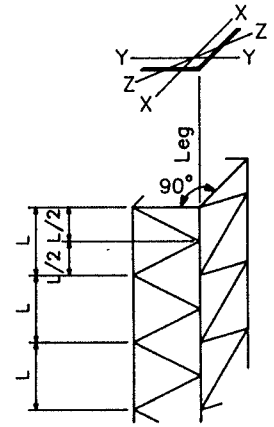

Leg Ⓒ $1.2L/r_{xx}$ controls

For these configurations some rolling of the leg angle will occur. Eccentricities at leg splices should be minimized. The thicker leg sections should be properly butt-spliced. The controlling L/r values shown above shall be used with a $K = 1$ as specified by Eq. 4.7-4.

EXAMPLE 2. Equal Leg Angles Used With Staggered Bracing

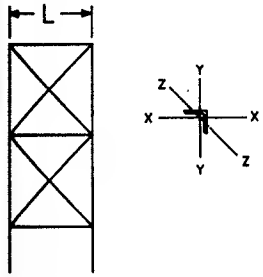

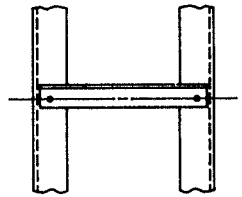

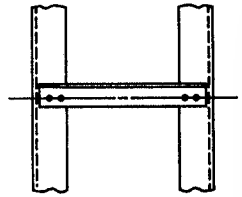

Tension system with compression struts.

L/r_{zz} critical factor
Eccentricity in critical axis
L/r_{zz} from 0 to 120
Eq. 4.7-7

Single bolt connections
No restraint at ends
Lr_{zz} from 120 to 250
Eq. 4.7-8

Multiple bolt connections. Partial restraint at both ends. See statement in text concerning partial restraint.
L/r_{zz} from 120 to 250
Eq 4.7-10

$L1^3/_4 \times 1^1/_4 \times {}^3/_{16}$

$r_{zz} = 0.27$ $A = 0.53$ sq. in.
36 ksi yield steel

$L = 32$ in.; $L/r_{zz} = 32/0.27 = 119$; Eqs. 4.7-7 and 4.6-1
$F_a = 19.8$ ksi.; Value $= 19.8 \times 0.53 = 10.5$ kips.

$L = 54$ in.; $L/r_{zz} = 54/0.27 = 200$
Eqs. 4.7-8 and 4.6-2
$F_a = 7.2$ ksi.;
Value $= 7.2 \times 0.53 = 3.8$ kips.

$L = 54$ in.; $L/r_{zz} = 200$
Eqs. 4.7-10 and 4.6-2
$F_a = 10.0$ ksi.; Value $= 10.0 \times 0.53 = 5.3$ kips.

EXAMPLE 3. Effect of End Connections on Member Capacity

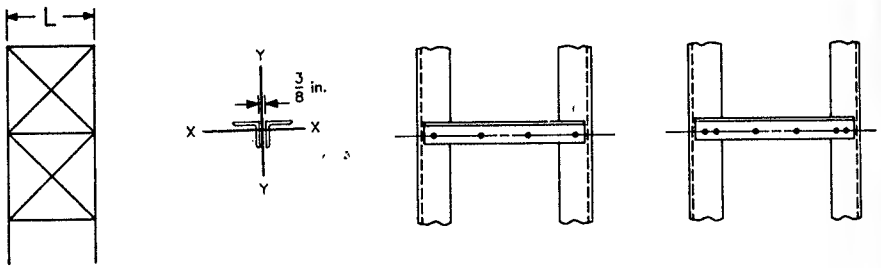

Tension system with compression struts.

L/r_{xx} or L/r_{yy} critical factor.
Concentric loading.
L/r_{xx} or L/r_{yy} from 0 to 120, Eq. 4.7-5.

Single bolt connection.
No restraint at ends.
L/r_{xx} or L/r_{yy} from 120 to 200, Eq. 4.7-8.

Multiple bolt connection. Partial restraint at ends. See statement in text concerning partial restraint.
L/r_{xx} or L/r_{yy} from 120 to 250, Eq. 4.7-10.

EXAMPLE 4. Concentric Loading, Two Angle Member

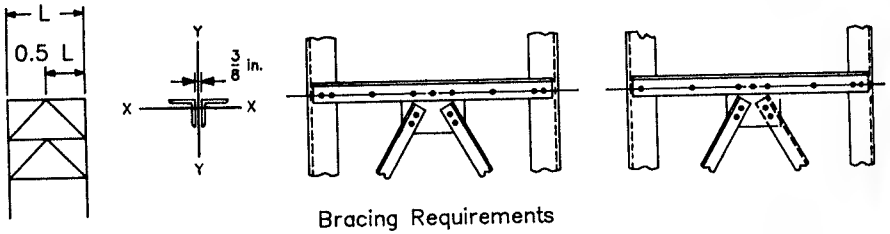

Bracing Requirements

Tension–compression system with compression struts.

Multiple bolt connections.
$0.5L/r_{xx}$ or L/r_{yy} critical factor.
Partial restraint at ends and intermediate. See statement in text concerning partial restraint.
$0.5L/r_{xx}$ or L/r_{yy} from 120 to 250, Eq. 4.7-10.

Concentric load at ends, eccentric loading at intermediate in both directions.
$0.5L/r_{xx}$ or L/r_{yy} from 0 to 120, Eq. 4.7-6.

Concentric loading at ends and intermediate.
$0.5L/r_{xx}$ or L/r_{yy} from 0 to 120, Eq. 4.7-5.

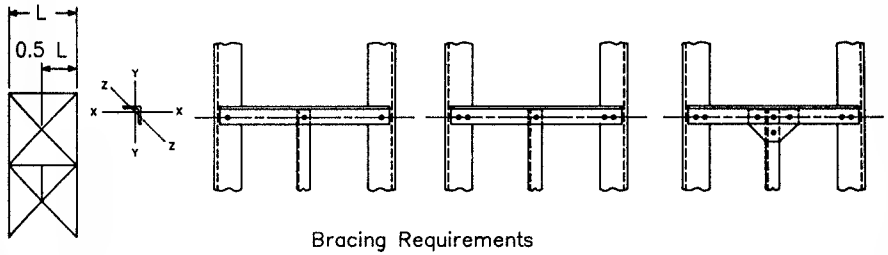

Bracing Requirements

Tension system with compression struts.

$0.5L/r_{zz}$ or L/r_{yy} critical factor.
Eccentricity in critical axis.
$0.5L/r_{zz}$ or L/r_{yy} from 0 to 120, Eq. 4.7-7.

Single bolt connection.
No restraint at ends or intermediate.
$0.5L/r_{zz}$ or L/r_{yy} from 120 to 200, Eq. 4.7-8.

Multiple bolt connection at ends.
Single bolt connection at intermediate point.
Partial restraint at one end. No restraint at intermediate. See statement in text concerning partial restraint.
$0.5L/r_{zz}$ from 120 to 225, Eq. 4.7-9.
Partial restraint at both ends. See statement in text concerning partial restraint.
L/r_{yy} from 120 to 250, Eq. 4.7-10.

Multiple bolt connection.
Partial restraint at ends and intermediate. See statement in text concerning partial restraint.
$0.5L/r_{zz}$ or L/r_{yy} from 120 to 250, Eq. 4.7-10.

$L1\frac{3}{4} \times 1\frac{1}{4} \times \frac{3}{16}$
$r_{zz} = 0.27$
$r_{yy} = 0.37$
$A = 0.53$ sq. in.
36 ki yield steel

L/r_{yy}, critical; $L = 44$ in.; $L/r_{yy} = 44/0.37 = 119$;
Eqs. 4.7-7 and 4.6-1 $F_a = 19.8$ ksi.
Value $= 19.8 \times 0.53 = 10.5$ kips

$L/r_{yy} = 74/0.37 = 200$
Eqs. 4.7-8 and 4.6-2
Value $= 7.2 \times 0.53 = 3.8$ kips

$L/r_{yy} = 200$
Eqs. 4.7-10 and 4.6-2
Value $= 10.0 \times 0.53 = 5.3$ kips

$L/r_{yy} = 200$
Eqs. 4.7-10 and 4.6-2
Value $= 10.0 \times 0.53 = 5.3$ kips

EXAMPLE 6. Effect of Subdivided Panels and End Connections

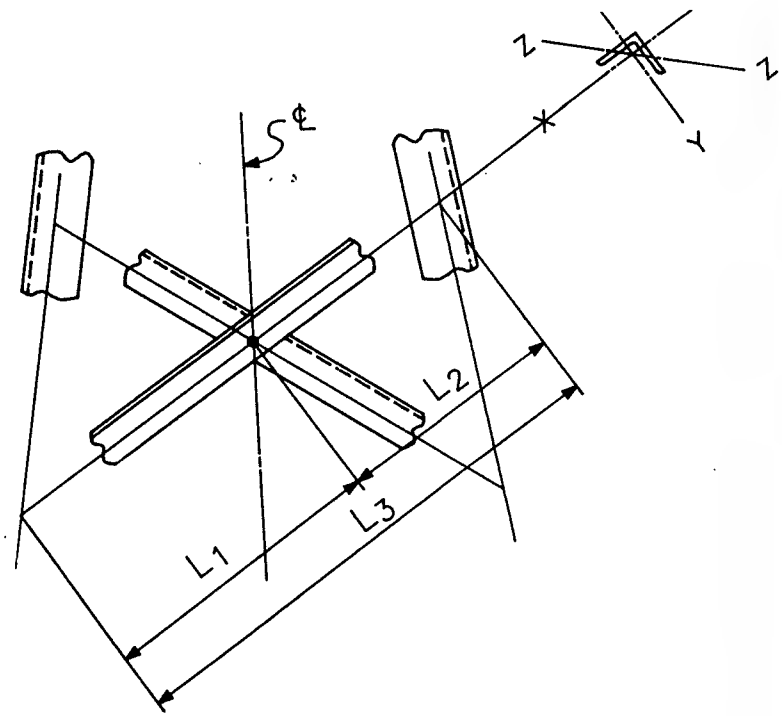

Tension–compression system—members connected at ℄. Tension member with force equal to or greater than 60% of the force in the compression member; partial restraint from the tension member at the ℄. Critical factor L_1/r_{zz} or $(L_1 + 0.5\ L_2) \div r_{yy}$. Eccentricity in critical axis; controlling L/r from 0 to 120 use Eq. 4.7–6.

Single bolt connection. No restraint at ends; controlling L/r from 120 to 200 use Eq. 4.7–8.

Tension member with force less than 60% of the force in the compression member; no restraint at the ℄ for the y–y axis of the compression member, L_1/r_{zz} or L_3/r_{yy}.

For multiple bolt connections and concentric loadings other allowable values as stated in the examples may be used.

EXAMPLE 7. L/r Determination, Diagonal Bracing

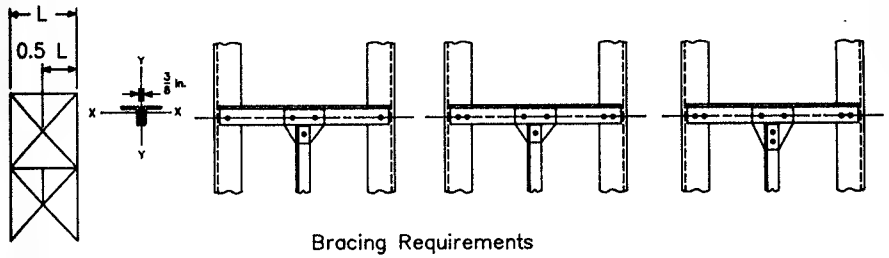

Bracing Requirements

Tension system with compression struts. $0.5L/r_{xx}$ or L/r_{yy} critical factor. Concentric loading $0.5L/r_{xx}$ or L/r_{yy} from 0 to 120, Eq. 4.7–5.	Single bolt connection. No restraint at ends or intermediate. $0.5L/r_{xx}$ or L/r_{yy} from 120 to 200, Eq. 4.7–8.	Multiple bolt connection at ends. Single bolt connection at intermediate point. Partial restraint at one end. No restraint at intermediate. See statement in text concerning partial restraint. $0.5L/r_{xx}$ from 120 to 225, Eq. 4.7–9. Partial restraint at both ends. See statement in text concerning partial restraint. L/r_{yy} from 120 to 250, Eq. 4.7–10.	Multiple bolt connection. Partial restraint at ends and intermediate. See statement in text concerning partial restraint. $0.5L/r_{xx}$ or L/r_{yy} from 120 to 250, Eq. 4.7–10.

EXAMPLE 8. Concentric Loading, Two Angle Member, Subdivided Panels

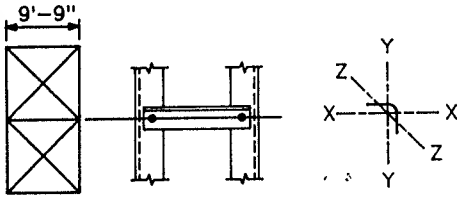

TENSION DIAGONALS–
COMPRESSION STRUT.

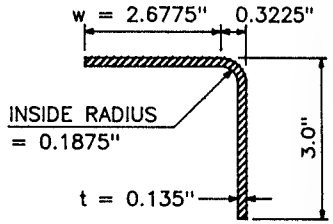

$F_y = 50$ ksi.

$C_c = 106.9$, $r_{zz} = 0.586$. Area = 0.777 sq. in. $L = 117$ in.

$w/t = 2.6775/0.135 = 19.8$, $w/t_{lim} = 80/\sqrt{F_y} = 11.3$,
$w/t = 144/\sqrt{F_y} = 20.4$, $11.3 < 19.8 < 20.4$.

Then $F_{cr} = (1.677 - 0.677 \times 19.8/11.3)50 = 24.6$ ksi. and $C_c = \pi\sqrt{2E/F_{cr}} = 3.14\sqrt{\dfrac{2 \times 29{,}000}{24.6}} = 152.5$.

For a single bolt connection—$L/r_{zz} = 117/0.586 = 200 > C_c$

$K = 1$ (Eq. 4.7-8); Value $= F_a \times A = \dfrac{286{,}000}{(200)^2} \times 0.777 = 5.6$ kips.

For a two bolt connection—$Lr_{zz} = 200 > C_c$ use (Eq. 4.7-10).

$KL/r = 46.2 + 0.615 \times 200 = 169.2$.

Value $= F_a \times A = \dfrac{286{,}000}{(169.2)^2} \times 0.777 = 7.8$ kips.

Change unsupported length to 4 ft 10½ in. $L/r_{zz} = \dfrac{58.5}{0.586} = 100$.

For a two bolt connection:

$L/r_{zz} < C_c$—eccentric connection, both ends use Eq. 4.7-7.

$KL/r = 60 + 0.5 \times 100 = 110$,

$F_a = \left[1 - 0.5\left(\dfrac{110}{152.5}\right)^2\right]24.6 = 18.2$ ksi.

Value $= F_a \times A = 18.2 \times 0.777 = 14.1$ kips.

EXAMPLE 9. Cold-Formed Angle

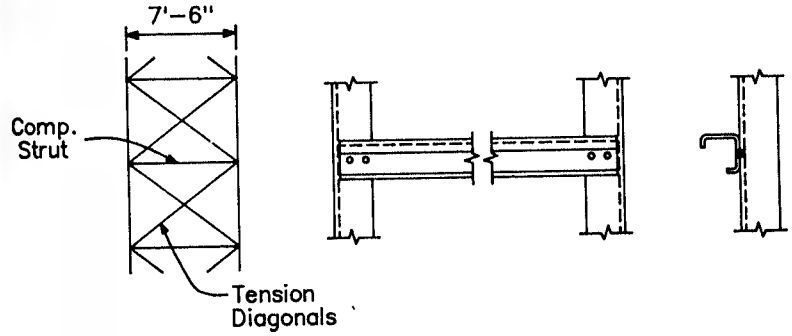

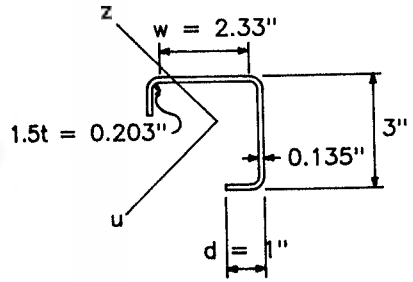

$F_y = 50$ ksi, $C_c = 106.9$

$\left(\dfrac{w}{t}\right)_{lim} = \dfrac{220}{\sqrt{F_y}} = \dfrac{220}{\sqrt{50}} = 31.1$

$\dfrac{w}{t} = \dfrac{2.33}{0.135} = 17.3 < 31.1$

$d_{min} = 2.8t\sqrt[6]{\left(\dfrac{w}{t}\right)^2 - \dfrac{4000}{F_y}}$ (sin Θ = 1)

$= 2.8 \times 0.135\sqrt[6]{17.3^2 - \dfrac{4000}{50}} = 0.93$ in. $< d$

$A = 1.03$ in.^{2}
$\bar{u} = 1.34$ in.
$m = 0.30$ in.
$u_0 = 1.34 + 0.30 = 1.64$ in.
$J = 0.00623$ in.^{4}

$C_w = 0.441$ in.^{6}
$I_u = 1.79$ in.^{4}, $r_u = 1.32$ in.
$I_z = 0.616$ in.^{4}, $r_z = 0.773$ in.
$I_{ps} = 1.79 + 0.616 + 1.03 \times 1.64^2$
$= 5.18$ in.^{4}, $r_{ps} = 2.24$ in.

$r_t = \sqrt{\dfrac{0.441 + 0.04 \times 0.00623 \times 90^2}{5.18}} = 0.689$ in.

$\dfrac{2}{r_{tf}^2} = \dfrac{1}{0.689^2} + \dfrac{1}{1.32^2} + \sqrt{\left(\dfrac{1}{0.689^2} - \dfrac{1}{1.32^2}\right)^2 + 4\left(\dfrac{1.64}{0.689 \times 1.32 \times 2.24}\right)^2}$
$= 4.903$

$r_{tf} = \sqrt{\dfrac{2}{4.903}} = 0.639$ in. $< r_{zz}$

$\dfrac{L}{r_{tf}} = \dfrac{90}{0.639} = 141$ (two bolt connection; Eq. 4.7-10)

$\dfrac{KL}{r_{tf}} = 46.2 + 0.615 \times 141 = 133$

$F_a = \dfrac{286{,}000}{(133)^2} = 16.2$ ksi.

Value $= F_a \times A = 16.2 \times 1.03 = 16.7$ kips

EXAMPLE 10. Cold-Formed Lipped Angle

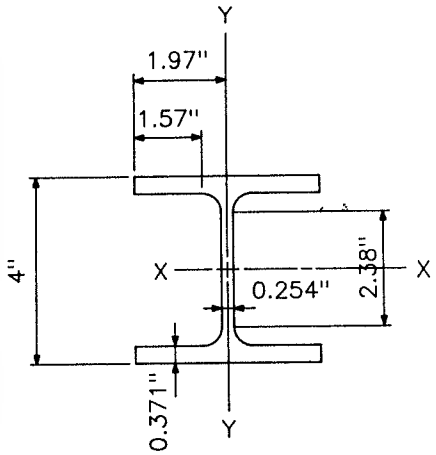

$M4 \times 13$ $F_y = 50$ ksi, $C_c = 106.9$
$A = 3.81$ sq. in., $r_y = 0.939$
$r_x = 1.66$, $J = 0.19$, $u_0 = 0$
$I_x = 10.5$, $I_y = 3.36$
$S_x = 5.24$, $S_y = 1.71$
$K = 1$, $I_{ps} = 13.86$, $C_w = 11.06$
Flange $w/t = 1.57/0.371 = 4.23$
Allowable $72/\sqrt{50} = 10.2$
Web $w/t = 2.38/0.254 = 9.4$
Allowable $220/\sqrt{50} = 31.1$
Local buckling of elements is not critical.

1. Determine column value, concentrically loaded; L = 96 in., $K_t = 1$

$$r_t = \sqrt{\frac{11.06 + 0.04 \times 0.19\,(96)^2}{13.86}} = 2.419 \text{ (Eq. 4.8-2) } r_y = 0.939 \quad \therefore r_y \text{ controls}$$

$$L/r_y = 96/0.939 = 102.2 < C_c \therefore F_a = \left[1 - 0.5\left(\frac{102.2}{106.9}\right)^2\right] 50 = 27.15 \text{ ksi.}$$

Value $= F_a \times A = 27.15 \times 3.81 = 103.4$ kips.

2. Determine if suitable for 50 kip load if member is connected on one flange at each end (eccentricity - 2.0 in.)

Use Eq. 4.12-1; $P_a = 103.4$ kips (prior calculations); $K_x = 1$; $L = 96$ in.; $K_y = 1$

$$P_{ex} = \frac{\pi^2 E\, I_x}{(K_x L_x)^2} = \frac{3.14^2 \times 29{,}000 \times 10.5}{96^2} = 326$$

$M_1 = M_2$ end moments; $C_m = 0.6 - 0.4\,(-1) = 1$

$$\text{Eq. 4.14-1; } r^2 = \frac{\sqrt{3.36}}{1.0 \times 5.24}\sqrt{11.06 + 0.04 \times 0.19\,(96^2)} = 3.15;\ r = 1.775$$

$$L/r = 96/1.775 = 54;\ F_a = \left[1 - 0.5\left(\frac{54}{106.9}\right)^2\right] 50 = 43.6 \text{ ksi.}$$

Max $= F_a \times S_x = 43.6 \times 5.24 = 228.5$ in. kips; $M_{ay} = 0$

$$\text{Eq. 4.12-1; } \frac{50}{103.4} + \frac{50 \times 2}{228.5} \times \frac{1}{1 - 50/326} = 0.484 + 0.515 = 0.999 < 1.0$$

Value of member is 50 kips. (This illustrates the importance of minimizing eccentrities in end connections.)

EXAMPLE 11. M-Section as Column Member

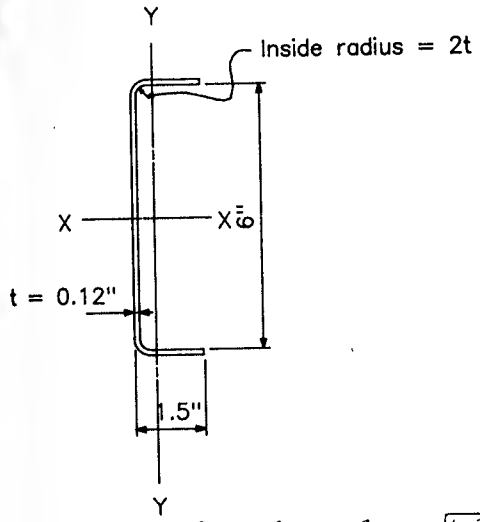

$I_x = 4.34$; $\bar{x} = 0.354$; $I_y = 0.239$; $m = 0.493$;
$x_0 = -(\bar{x} + m) = -0.847$; $J = 0.004$;
$C_w = 1.37$; $r_x = 2.06$, $r_y = 0.48$; $r_{ps} = 2.28$;
$I_{ps} = 5.3$; $A = 1.02$ sq. in. $K = 1$
$F_y = 36$ ksi.; $C_c = 126$; $L = 48$ in.
Determine column value for concentric load.
Note: X-X is axis of symmetry.

$$\text{Eq. 4.8-2; } r_t = \sqrt{\frac{1.37 + 0.04 \times 0.004\,(48)^2}{5.3}} = 0.57$$

Eq. 4.8-1; Terms use U-U as symmetrical axis. (Use X-X values in place of U-U values)

$$\frac{2}{r_{tf}^2} = \frac{1}{0.57^2} + \frac{1}{2.06^2} + \sqrt{\left(\frac{1}{0.57^2} - \frac{1}{2.06^2}\right)^2 + 4\left(\frac{0.847}{0.57 \times 2.06 \times 2.28}\right)^2}$$

$$\frac{2}{r_{tf}^2} = 6.23;\ r_{tf} = 0.57$$

$$r_y < r_x \text{ or } r_{tf}\ L/r_y = 48/0.48 = 100\ F_a = \left[1 - 0.5\left(\frac{100}{126}\right)^2\right] 36 = 24.7 \text{ ksi.} = f$$

Check flanges $w/t = 1.14/0.12 = 9.5$; Eq. 4.9-1 $= 72/\sqrt{f} = 72/\sqrt{24.7} = 14.5$

Check web $w/t = 5.28/0.12 = 44$; Eq. 4.9-3 $= 220/\sqrt{f} = 220/\sqrt{24.7} = 44.3$

Elements are fully effective. Value $= F_a \times A = 24.7 \times 1.02 = 25.2$ kips.

Determine if channel is suitable for 8.7 kips load if connection is to back of web. End moments M_1 and M_2 are equal: $C_m = 1.0$; Eccentricity about Y-Y axis $= e = 0.354 + 0.06 = 0.41$; $S_{my} = 0.239/1.09 = 0.22$ (toe of flange)

$$M_{ay} = 36 \times 0.22 = 7.9 \text{ in. kips; } P_{ey} = \pi^2 E\, I_y/(K_y L_y)^2 = \frac{3.14^2 \times 29{,}000 \times 0.239}{48^2}$$

$M_{ax} = 0$; $\qquad P_{ey} = 29.7$

$$\text{Eq. 4.12-1; } \frac{8.7}{25.2} + \frac{8.7 \times 0.41}{7.9}\left(\frac{1}{1 - 8.7/29.7}\right) = 0.35 + 0.64 = 0.99 < 1.0$$

Value of member is 8.7 kips (This illustrates the importance of minimizing eccentricities at the end connections.)

EXAMPLE 12. Channel as Column

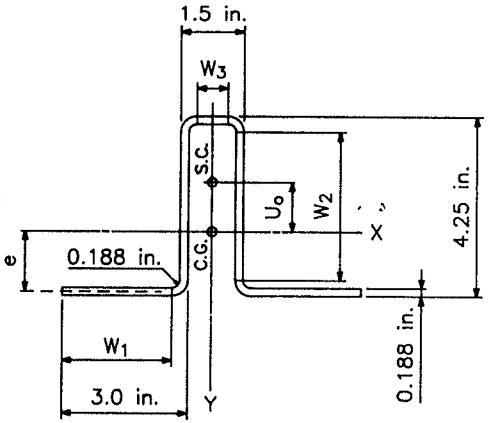

u_0 = -1.178; I_y = 6.282;
r_y = 1.504; I_x = 6.168;
r_x = 1.491; r_{ps} = 2.423;
A = 2.775 sq. in.; F_y = 50 ksi.;
C_c = 106.9; C_w = 13.567;
J = 0.0327; I_{ps} = 16.3;
L = 120 in.; K = 1; e = 1.412

Determine value of concentric load.

$$\text{Eq. 4.8-2; } r_t = \sqrt{\frac{13.567 + 0.04 \times 0.0327 \times 120^2}{16.3}} = 1.41$$

Eq. 4.8-1; Terms use U-U as symmetrical axis.
(Use Y-Y values in place of U-U values)

$$\frac{2}{r_{tf}^2} = \frac{1}{1.41^2} + \frac{1}{1.504^2} + \sqrt{\left(\frac{1}{1.41^2} - \frac{1}{1.504^2}\right)^2 + 4\left(\frac{-1.178}{1.41 \times 1.504 \times 2.42}\right)^2}$$

$$\frac{2}{r_{tf}^2} = 1.407 \qquad r_{tf} = 1.19 < r_x$$

$$L/r_{tf} = 120/1.19 = 100.8; \text{ Eq. 4.6-1. } F_a = \left[1 - 0.5\left(\frac{100.8}{106.9}\right)^2\right] 50 = 27.7 \text{ ksi} = f$$

w_2/t = 18.6	Eq. 4.9-3	$220/\sqrt{27.7}$	= 41.8 > 18.6
w_3/t = 3.98	Eq. 4.9-3	$220/\sqrt{27.7}$	= 41.8 > 3.98
w_1/t = 13.96	Eq. 4.9-1	$72/\sqrt{27.7}$	= 13.68 < 13.96

Maximum for w_1 = 13.68 × 0.188 = 2.572 in. (w_1 is 2.624 in.)
New area = 2.775 - 2 × 0.188 (2.624 - 2.572) = 2.775 - 0.020 = 2.755 sq. in.
Value = $F_a \times A$ = 27.7 × 2.755 = 76.3 kips.

EXAMPLE 13. T-Section as Column

REFERENCES AND BIBLIOGRAPHY

References

Carpena, A., and Diana, G. (1971). "Behavior to wind action of angle and T-bars on H. V. lattice structures." *Paper 71 TP 668-PWR*, IEEE Power Engr. Soc., Summer Meeting, Portland, Oreg.

Cassarico, G., DePonte, S., and Faggiano, P. (1983). "Experimental investigation of the aeroelastic instability of thin walled open sections." *Constr. Metal.* 1.

Cold-Formed Steel Design Manual. (1968). Amer. Iron and Steel Inst., Washington, D.C., Part III.

Gaylord, E., and Gaylord, C. (1977). *Design of steel structures*, second ed. McGraw-Hill Book Company, New York, N.Y.

Gaylord, E. H., and Wilhoite, G. M. (1985). "Transmission towers: Design of cold-formed angles." *J. Struct. Engrg.*, ASCE, 111 (8), 1810–1825.

Guide for Design of Steel Transmission Towers, Manual No. 52. (1971). Task Commit. on Tower Design of Commit. on Anal. and Design of Struct. of Struct. Div., ASCE.

Guide to Stability Criteria for Metal Structures. (1978). Third Ed. B. G. Johnston, ed., John Wiley & Sons, Inc., New York, N.Y.

Leigh, J., Thomas B., and Lay, M. (1984). "Safe load for laterally unsupported angles." Amer. Inst. of Steel Constr. *Engr. J.*, New York, N.Y.

Madugula, M., and Kennedy, J. (1985). *Single and compound angle members.* Elsevier Applied Science Publishers, New York, N.Y.

Madugula, M. K. S., and Ray, S. K. (1984). "Ultimate strength of eccentrically loaded cold-formed angles." *Canad. J. Civ. Engr.* 11.

Manual of Steel Construction—Load and Resistance Factor Design. (1986). First Ed., Amer. Inst. of Steel Constr., Inc. Chicago, Ill.

Specification for the Design of Cold-Formed Steel Structural Members (with Commentary). (1986). Amer. Iron and Steel Inst., Washington, D.C.

Specification for the Design, Fabrication and Erection of Structural Steel for Buildings (with Commentary). (1978). Amer. Inst. of Steel Constr. Inc., Chicago, Ill.

Technologic Papers of the Bureau of Standards (1922). No. 218, U.S. Dept. of Commerce, Washington, D.C.

Timoshenko, S., and Gere, J. M. (1961). *Theory of elastic stability*, Second Ed. McGraw-Hill Book Co., New York, N.Y.

Yu, W.-W. (1986). *Cold-formed steel structures.* McGraw-Hill Book Co., New York, N.Y.

Zavelani, A. (1984). "Design recommendations for cold-formed sections." presented at ASCE Spring Convention, Atlanta, Ga.

Zavelani, A., and Faggiano, P. (1985). "Design of cold-formed latticed transmission towers." *J. Struct. Engr.*, ASCE, 111 (11), 2427–2445.

Bibliography

Cold-Formed Steel Design Manual. (1983). Amer. Iron and Steel Inst., Washington, D.C.

Faggiano, P. (1985). "Lattice tower design using cold-formed shapes." *Proc. Conf. on Innovations in the Design of Electrical Transmission Structures*, Struct. Div., ASCE, Kansas City, Mo., Aug. 37–46.

Gaylord, E. H. (1985) "Cold-formed angles for transmission towers." *Proc. Conf. on Innovations in the Design of Electrical Transmission Structures*, Struct. Div., ASCE, Kansas City, Mo., Aug., 57–68.

Kennedy, J. B., and Madugula, M. K. S. (1972). "Buckling of steel angle and tee struts," *J. of the Structural Division*, ASCE, 98 (ST11), 2507–2522.

✓Kennedy, J. B., and Madugula, M. K. S. (1982). "Buckling of angles: State of the art." *J. of the Structural Division*, ASCE, 108 (ST9), 1967–1980.

Manual of Steel Construction (1980). Eighth Ed., Amer. Inst. of Steel Const., Inc., Chicago, Ill.

✓Mueller, W. H., and Wagner, A. L. (1985). "Plastic behavior of steel angle columns." *Research Report*, Bonneville Power Admin.

Wilhoite, G., Zandonini, R., and Zavelani, A. (1984). "Behavior and strength of angles in compression: An experimental investigation." presented at ASCE Structures Congress, San Francisco, Calif.

Wilhoite, G., Zandonini, R., and Zavelani, A. (1984). "Behavior and strength of T-shapes in compression: An experimental investigation." presented at ASCE Structures Congress, San Francisco, Calif.

Zavelani, A. (1985). "Design and test of cold-formed steel members." *Proc. Conf. on Innovations in the Design of Electrical Transmission Structures*, Struct. Div., ASCE, Kansas City, Mo., Aug., 69–78.

Chapter 5

DESIGN OF CONNECTIONS

5.1 INTRODUCTION

Bolted connections for transmission structures are normally designed as bearing type connections. It is assumed that bolts connecting one member to another carry the load in the connection equally.

The minimum end and edge distances determined by the provisions of this chapter *do not include* an allowance for fabrication and rolling tolerances.

Unless otherwise noted, these provisions pertain to standard holes, i.e., holes nominally 1/16 in. larger than the bolt diameter.

5.2 GENERAL REQUIREMENTS

The Engineer of Record (EOR) shall approve the shop detail drawings, see Section 6.1.2.

5.3 FASTENERS

5.3.1 Materials

The commonly used fastener specifications for latticed steel transmission towers are ASTM A394 for bolts and A563 for nuts.

5.3.2 Bolt Shear Capacity

Allowable shears for A394 bolts shall be taken to be the shear strengths tabulated in the ASTM specification.

For bolts that do not have an ASTM-specified shear strength the allowable shear stress F_v on the effective area shall be $0.62F_u$, where F_u is the specified minimum tensile strength of the bolt material. The effective area is the gross cross-sectional area of the bolt if threads are

excluded from the shear plane or the root area if threads are in the shear plane.

5.3.3 Bolt Tension Capacity

Bolts shall be proportioned so that the sum of the tensile stresses caused by the applied external load and any tensile stress resulting from prying action does not exceed the allowable tensile stress F_t as follows:

a. for bolts having a specified proof-load stress, F_t = ASTM proof-load stress by the length-measurement method;
b. for bolts with no specified proof-load stress, $F_t = 0.6F_u$; and
c. the stress area A_s is given by

$$A_s = \pi/4\ [d - (0.974/n)]^2 \qquad (5.3\text{-}1)$$

where d = nominal diameter of the bolt (in.); and n = number of threads per inch.

5.3.4 Bolts Subject to Combined Shear and Tension

For bolts subject to combined shear and tension the allowable tensile stress $F_{t(v)}$ shall be

$$F_{t(v)} = F_t\ [1 - (f_v/F_v)^2]^{1/2} \qquad (5.3\text{-}2)$$

where F_t = allowable tensile stress defined in Sections 5.3.3.a and 5.3.3.b (ksi); F_v = allowable shear stress defined in Section 5.3.2 (ksi); and f_v = computed shear stress on effective area (ksi). The combined tensile and shear stresses shall be taken at the same cross section in the bolt, either in the threaded or the unthreaded portion.

5.4 ALLOWABLE BEARING STRESS

The maximum bearing stress, calculated as the force on a bolt divided by the product of the bolt diameter times the thickness of the connected part, shall not exceed 1.5 times the specified minimum tensile strength F_u of the connected part or the bolt; see Commentary on Chapter 5.

5.5 MINIMUM DISTANCES

5.5.1 End Distance (See Fig. 5C.2)

For stressed members the distance e measured from the center of a hole to the end, whether this end is perpendicular or inclined to the line

of force, shall be not less than the value of e_{min} determined as the largest value of e from Eqs. 5.5-1, 5.5-2, and 5.5-3:

$$e = 1.2\ P/F_u t \qquad (5.5\text{-}1)$$
$$e = 1.3\ d \qquad (5.5\text{-}2)$$
$$e = t + d/2 \qquad (5.5\text{-}3)$$

where F_u = specified minimum tensile strength of the connected part (ksi); t = thickness of the connected part (in.); d = nominal diameter of bolt (in.); and P = force transmitted by the bolt (kips). For redundant members the values of e_{min} shall be determined as the larger value of e from Eqs. 5.5-3 and 5.5-4:

$$e = 1.2\ d \qquad (5.5\text{-}4)$$

where d = nominal diameter of bolt (in.).

Eq. 5.5-3 is not applicable for either stressed members or redundant members if the holes are drilled.

5.5.2 Center-to-Center Bolt Hole Spacing

Along a line of transmitted force, the distances between centers of holes shall be not less than the value of s_{min} determined as

$$s_{min} = 1.2P/F_u t + 0.6d \qquad (5.5\text{-}5)$$

Refer to the Commentary on Chapter 5 for suggested minimum spacing requirements for assembly purposes.

5.5.3 Edge Distance (See Fig. 5C.2)

The distance f from the center of a hole to the edge of the member shall be not less than the minimum edge distance f_{min}:

For a rolled edge

$$f_{min} = 0.85\ e_{min} \qquad (5.5\text{-}6)$$

For a sheared or mechanically guided flame cut edge

$$f_{min} = 0.85\ e_{min} + 0.0625 \qquad (5.5\text{-}7)$$

where e_{min} = minimum end distance from Section 5.5.1.

5.6 ATTACHMENT HOLES

This section is valid for hole diameter to bolt diameter ratios ≤ 2. The force P for a bolt in an attachment hole shall be limited by:

$$P \leq 0.75\,(L - 0.5d_h)\,t\,F_u \qquad (5.6\text{-}1)$$

or

$$P \leq 1.35\,d\,t\,F_u \qquad (5.6\text{-}2)$$

where L = minimum distance from the center of the hole to any member edge (in.); d = nominal diameter of bolt (in.); d_h = attachment hole diameter (in.); t = member thickness (in.); and F_u = specified minimum tensile strength of the member (ksi).

COMMENTARY ON CHAPTER 5

5C.1 INTRODUCTION

The purchaser's procurement specification should specify if the end and edge distances are minimum values which cannot be underrun. Tolerances for sheared and cut ends are normally established by the supplier. Edge distances are controlled by the gage lines selected, and the detailer must provide for normal rolling tolerances to avoid possible underrun of the edge distances. The rolling tolerances contained in ASTM Specification A6 should be used as a guide (Standard Specifications for General Requirements, etc. 1986).

5C.3 FASTENERS

5C.3.2 Bolt Shear Capacity

Bolts, such as A394 bolts (Standard Specifications for Zinc-Coated Steel Transmission Tower Bolts 1986) are typically installed to the drawn tight condition or to some specified minimum torque. Thus, the load transfer across a bolt is governed by direct shear rather than friction. ASTM A394 provides the specified minimum shear values when threads are included in or excluded from the shear plane. The allowable shear of 0.62 F_u for bolts that do not have an ASTM specified shear stress is conservative (Fisher and Strulk 1974).

5C.3.3 Bolt Tension Capacity

The specified tensile stresses approximate those at which the rate of elongation of the bolt begins to increase significantly. The ASTM proof-load stress is approximately equal to the yield stress, and 0.6 F_u is a conservative estimate for bolts for which the proof load is not specified.

If allowable stresses exceed the yield stress, permanent stretch can

occur in the bolt. This could loosen the nut and cause a loss of tightness in the joint.

5C.3.4 Bolts Subject to Combined Shear and Tension

Tests on rivets and bolts indicate that the interaction between shear and tension in the fastener may be represented by formulas which plot as ellipses (Fisher and Strulk 1974; Higgins and Munse 1952; Chesson et al. 1965). Therefore, an elliptical expression, with major and minor axes based upon the allowable shear and tension values given in Sections 5.3.2 and 5.3.3, has been specified.

5C.4 Allowable Bearing Stress

The AISC (*Manual of Steel Construction* 1980) allowable bearing stress has been selected as the maximum allowable bearing stress. While this value may seem unduly conservative, it conforms with the experience in the tower industry. Designs produced with bearing values less than or equal to $1.5F_u$ and conforming with the other provisions of this document have demonstrated satisfactory control over bolt hole ovalization during full-scale tower tests. It must be remembered that the end and edge distances allowed may be less than the minimum AISC specified values.

When applying these provisions, the designer must recognize that the required end and edge distances depend upon the bearing stress in the connection. It may be useful to reduce the bearing stress below the maximum allowable, as this may permit a reduction in the end and edge distances required.

The allowable bearing value on the bolts must be checked if the tensile strength, F_u, of the member material exceeds the F_u value of the bolt. This would occur if a A394, Type 0, bolt (F_u = 74 ksi) is used to connect a A572-Grade 65 material (F_u = 80 ksi). The full diameter of the bolt should be used for this calculation, with an allowable bearing stress equal to $1.5F_u$ of the bolt (Wilhoite 1985).

5C.5 MINIMUM DISTANCES

5C.5.1 End Distance

The provisions of this section are applicable to sheared and mechanically guided flame cut ends. Eq. 5.5-1 provides the end distance required for strength. The required end distance is a function of the load being transfered in the bolt, the tensile strength of the connected part, and the thickness of the connected part. Test data confirm that relating the ratio of end distance to bolt diameter to the ratio of bearing stress to tensile strength gives a lower bound to the published test data for single fastener connections with standard holes (Fisher and Strulk 1974). The end distance required by the above expression has been multiplied by 1.2 to account for uncertainties in the end distance strength of the members (Fisher and Strulk 1974; *Proposed Load and Resistance Factor* 1983). For adequately spaced multiple bolt connections this expression is conservative.

Eq. 5.5-2 is a lower bound on end distance which has been successfully used in tower practice in stressed members. A minimum end distance of 1.2d has been specified for redundants since they carry only secondary stresses, which are much less than stresses in the members they brace.

Latitude is provided to use the minimum end distances and determine the allowable bearing stress for this condition. Eqs. 5.5-1 and 5.5-2 allow the flexibility to determine what combination of bearing value and end distance satisfies the engineering and detailing requirements. Eq. 5.5-3 places an end distance restriction on thick members such that punching of the holes does not create a possible break-out condition. If the holes are drilled in members where the end distance would be governed by Eq. 5.5-3, this requirement is not applicable.

Satisfactory punching of the holes in thick material is dependent on the ductility of the steel, the adequacy of the equipment (capability of the punching equipment and proper maintenance of punches and dies), the allowed tolerances between the punch and die, and the temperature of the steel. The following guidelines have been used satisfactorily: for 36 ksi yield steel the thickness of the material should not exceed the hole diameter; for 50 ksi yield steel the thickness of the material should not exceed the hole diameter minus 1/16 in.; and for 65 ksi yield steel the thickness of the material should not exceed the hole diameter minus 1/8 in.

Fig. 5C.1 illustrates the end distances for a A394, Type 0, 3/4 in. diameter bolt used to connect A36 steel stressed members. The maximum bearing stress of $1.5F_u$ has been used unless shear governs the maximum force in the bolt. Table 5C.1 contains the tabulated values for Fig. 5C.1 and shows that Eq. 5.5-1 governs up through a thickness of 5/16 in., Eq. 5.5-2 governs for thicknesses of 3/8 in. through 9/16 in., and Eq. 5.5-3 governs for thicknesses of 5/8 in. and above unless the holes are drilled. For drilled holes, Eq. 5.5-2 would continue to govern over this range of thicknesses. The range of thicknesses over which each equation governs changes if the bearing stress is reduced below the maximum allowable bearing stress of $1.5F_u$. Fig. 5C.2 illustrates the proper application of the required end distance when a member is clipped and the sheared surface is not perpendicular to the primary axes of the member.

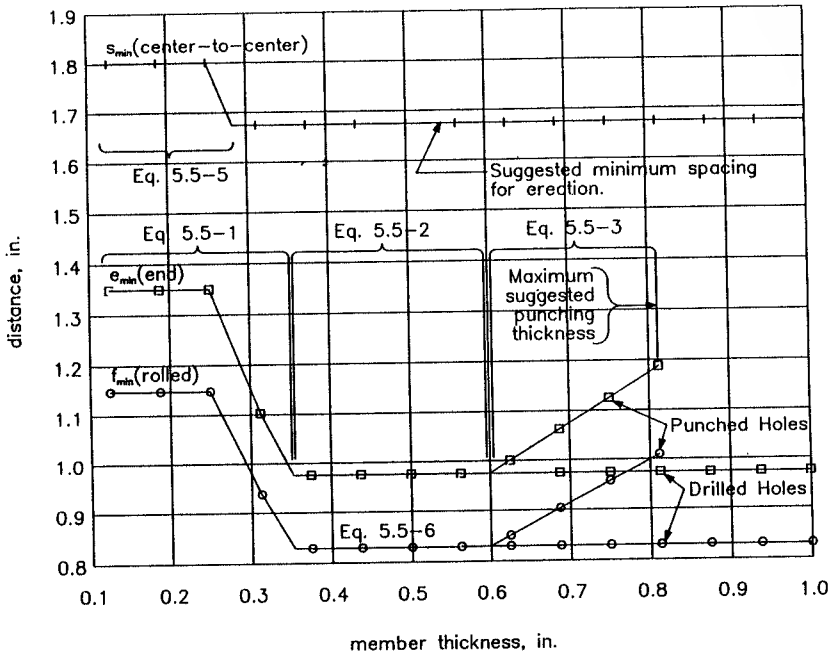

Legend e_{min}– □ f_{min}– O s_{min}– I

End, rolled edge and center to center distances for a A394, Type 0, ¾ in. diameter bolt used to connect A36 stressed steel members. Bolt in single shear (thru threads). Bearing stress = 1.5 F_u, unless shear governs the maximum force in the bolts.

FIG. 5C.1—A394 Bolt Connecting A36 Steel

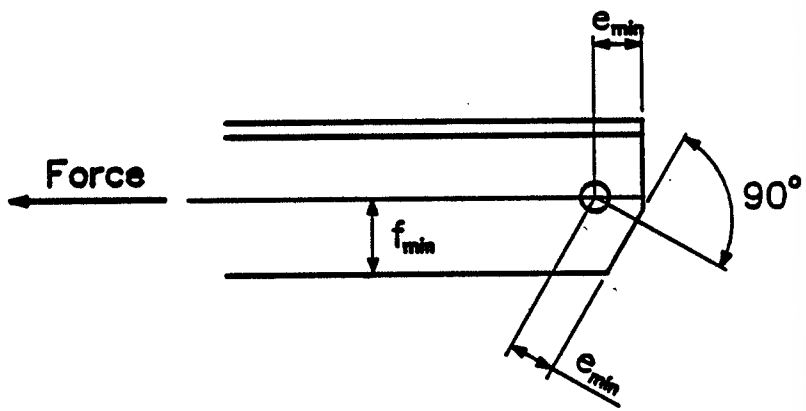

FIG. 5C.2—Application of e_{min} to Clipped Member

Table 5C.1: A394 Bolt Connecting A36 Steel

Values for end, rolled edge and center-to-distances for a A394, Type 0, ¾ in. diameter bolt used in single shear through the threads to connect A36 steel stressed members. Bearing stress = 1.5F_u

Member Thickness t(in.) (1)	Bearing Stress 1.5F_u(ksi) (2)	Force Bolt P(kips) (3)	Eq. 5.5–1 e(in.) (4)	Eq. 5.5–2 e(in.) (5)	Eq. 5.5–3 e(in.) (6)	e_{min}(in.) (7)	Eq. 5.5–5 s_{min}(in.) (8)	Suggested Erection Spacing(in.) (9)	s_{min}(in.) (10)	Eq. 5.5–6 f_{min}(in.) (11)
1/8	87.0	8.16	1.35	0.98	0.50	1.35	1.80	1.67	1.80	1.15
3/16	87.0	12.23	1.35	0.98	0.56	1.35	1.80	1.67	1.80	1.15
1/4	87.0	16.31	1.35	0.98	0.63	1.35	1.80	1.67	1.80	1.15
5/16	87.0	16.65[a]	1.10	0.98	0.69	1.10	Less	1.67	1.67	0.94
3/8	87.0	16.65[a]	Less	0.98	0.75	0.98	Than	1.67	1.67	0.83
7/16	87.0	16.65[a]	Than	0.98	0.81	0.98	Col. 9	1.67	1.67	0.83
1/2	87.0	16.65[a]	Col. 5	0.98	0.88	0.98		1.67	1.67	0.83
9/16	87.0	16.65[a]		0.98	0.94	0.98		1.67	1.67	0.83
5/8	87.0	16.65[a]		0.98	1.00	1.00		1.67	1.67	0.85
11/16	87.0	16.65[a]		0.98	1.06	1.06		1.67	1.67	0.90
3/4	87.0	16.65[a]		0.98	1.13	1.13		1.67	1.67	0.96
13/16	87.0	16.65[a]		0.98	1.19	1.19		1.67	1.67	1.01
7/8	87.0	16.65[a]		0.98	0.98[b]	0.98[b]		1.67	1.67	0.83[b]
15/16	87.0	16.65[a]		0.98	0.98[b]	0.98[b]		1.67	1.67	0.83[b]
1	87.0	16.65[a]		0.98	0.98[b]	0.98[b]		1.67	1.67	0.83[b]

Eq. 5.5–1 = $1.2P/(F_u t)$.
Eq. 5.5–2 = $1.3d$.
Eq. 5.5–3 = $t + d/2$.

Eq. 5.5–5 = $1.2P/(F_u t) + 0.6d$.
Erection = nut c dimension + 0.375.
Eq. 5.5–6 = $.85e_{min}$.

Bolt diameter = 0.75 in.
Bolt shear strength = 16.65 kips.
Point to point nut dimension = 1.30 in.
Member tensile strength (F_u) = 58.0 ksi.

a. P limited by single shear strength (thru threads) of bolt.
b. t = 13/16; suggested maximum punching thickness (13/16 in. O hole in A36 steel). Distance shown is for drilled holes.

5C.5.2 Center-to-Center Bolt Hole Spacing

Two factors must be considered when determining the minimum center-to-center bolt spacing. Eq. 5.5-5 is the strength expression for end distance (Eq. 5.5-1) plus 0.6 times the diameter of the adjacent bolt. The term 0.6d has been specified instead of the more commonly recognized 0.5d to provide greater control over the reduction in center-to-center material due to hole break-out during punching. For low bearing values the spacing requirements predicted by Eq. 5.5-5 may be less than the spacing required for installation. Spacing requirements for convenient installation should be determined by adding 3/8 in. to the width across the points of the nut being used. Fig. 5C.1 and Table 5C.1 show that the installation requirement governs for thick members.

5C.5.3 Edge Distance

Several studies have considered how end and edge distance affects the strength of connections for stressed members (Bodegom et al. 1984; Kennedy and Sinclair 1969; Gilchrist and Chong 1979). Tests in Bodegom et al. (1984) establish a ratio of the rolled edge distance to the sheared edge distance to prevent a tension tear-out of the rolled edge. Eq. 5.5-6 combines the results given in Bodegom et al. (1984) with the minimum end distances in Eq. 5.5-2. The same ratio is retained for determining the relationship between all end distances and the required rolled edge distance. When the edge distance is to a sheared or mechanically guided flame cut edge, 1/16 in. is added to the rolled edge distance. Fig. 5C.1 shows the relationship between the rolled edge and end distances.

5C.6 ATTACHMENT HOLES

Oversized holes are commonly used as load attachment points for insulator strings, overhead ground wires, and guys. These holes are not used where connections are designed for load reversal. The possible failure modes considered are bearing, tension, and shear. These recommendations do not exclude the use of other attachment holes or slots designed by rational analysis.

Eq. 5.6-1 assumes the member will fail in shear with shear planes developing at each side of the bolt through the edge of the member; Fig. 5C.3 illustrates the various terms used. The equation was developed by replacing e in Eq. 5.5-1 with $(L - 0.5d_h)$, solving for P, and multiplying the result by 0.9. Given that L is defined as the distance from the center of the hole to any member edge, the member will always fail in shear before it fails in tension. The dimension L shown for the edge distance, perpendicular to the line of action of P, may be reduced if analysis

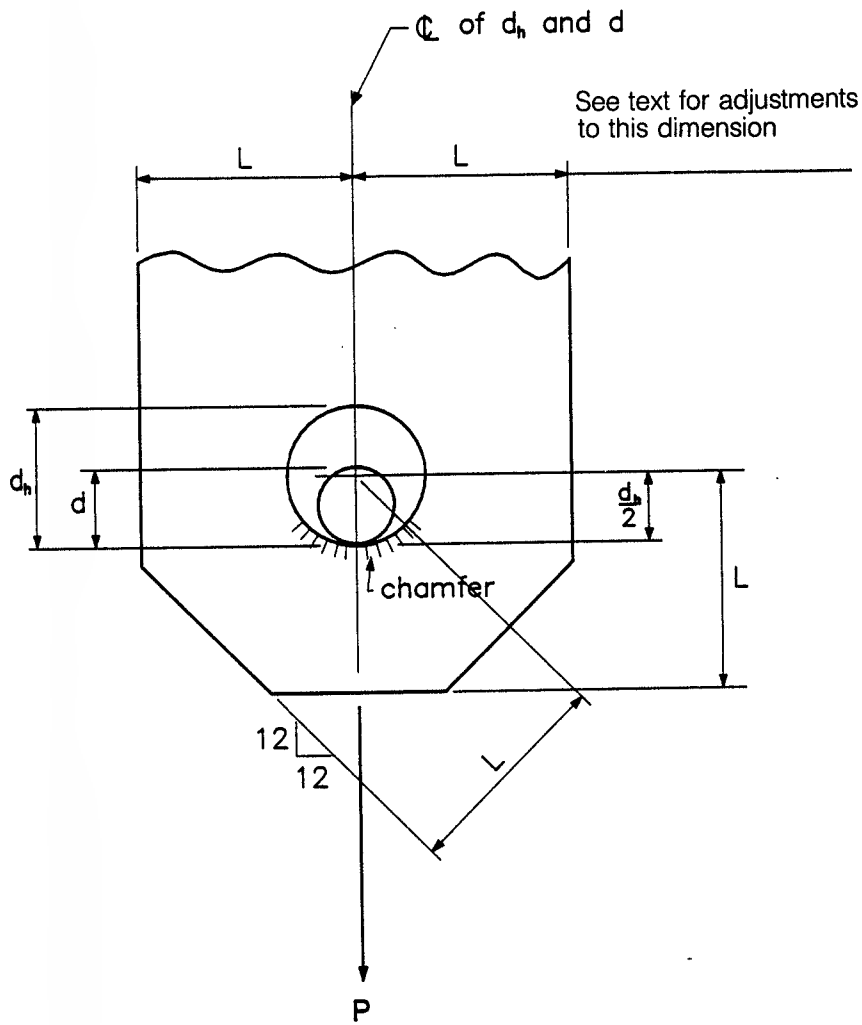

FIG. 5C.3—Application of Oversized Holes

shows that the sum of the tensile stress P/A and the tensile bending stress do not exceed 0.67 F_y, where F_y is the member yield stress.

Eq. 5.6-1 has been limited to hole diameters less than or equal to two bolt diameters. This represents the range of experience over which the equation has been used in practice. No adjustment to the equation is required for slight chamfering of the hole.

For attachment plates subject to bending, additional analysis will be required to determine the plate thickness. Eq. 5.6-2 limits the bearing

stress to 0.9 times the allowable value for standard holes to provide an additional factor for possible wear.

For everyday loading, as specified by the purchaser, P should not exceed $0.5dtF_u$ to avoid indentation of the material under sustained loading and excessive wear. Everyday loading may be defined as that resulting from the bare weight of the conductor at 60°F final sag unless the location is subjected to steady prevailing wind. If the location is subjected to steady prevailing wind, the everyday loading may be considered to be the resultant load caused by the bare weight of the conductor and the prevailing wind at 60°F final sag.

REFERENCES AND BIBLIOGRAPHY

References

Bodegom, J. V., Evensen, B., and Gidlund, J. I. (1984). "Single bolt connections of angles in transmission line towers." *CIGRE Report*, Study Committee 22, Working Group 08, Aug.

Chesson, E., Faustino, N. L., and Munse, W. H. (1965). "High strength bolts subjected to tension and shear." *J. of the Structural Division*, ASCE, 91 (ST5), 155–180.

Fisher, J. W., and Strulk J. H. A. (1974). *Guide to design criteria for bolted and riveted joints*. John Wiley and Sons, New York, N.Y.

Gilchrist, R. T., and Chong, K. P. (1979). "Thin light-gage bolted connections without washers." *J. of the Structural Division*, ASCE, 105 (ST1), 175–183.

Higgins, T. R., and Munse, W. H. (1952). "How much combined stress can a rivet take." *Engrg. News-Rec.*, Dec. 4, 40.

Kennedy, J. B., and Sinclair, G. R. (1969). "Ultimate capacity of single bolted angle connections." *J. of the Structural Division*, ASCE, 95 (ST8). 1645–1660.

Manual of Steel Construction. (1980). Eighth Ed., Amer. Inst. of Steel Const., Inc., Chicago, Ill.

Proposed Load and Resistance Factor Design Specification for Structural Steel Buildings. (1983). Amer. Inst. of Steel Const., Inc., Chicago, Ill. 87–88.

"Standard Specification for General Requirements for Rolled Steel Plates, Shapes, Sheet Piling, and Bars for Structural Use, Designation A 6." (1986). *Annual book of ASTM standards*, Section 1, Vol. 01.04, Amer. Soc. for Testing and Materials, Philadelphia, Pa.

"Standard Specification for Zinc-Coated Steel Transmission Tower Bolts, Designation A 394." (1986). *Annual book of ASTM standards*, Section 15, Vol. 15.08, Amer. Soc. for Testing and Materials, Philadelphia, Pa.

Wilhoite, G. M. (1985). "Bolted connections for steel towers." *Proc. Conf. on Innovations in the Design of Electrical Transmission Structures*, Struct. Div., ASCE, Kansas City, Mo., Aug., 79–85.

Bibliography

Brockenbrough, R. L. (1983). "Considerations in the design of bolted joints for weathering steel." *Engrg. J.* Amer. Inst. of Steel Const., 40–45.

Fisher, J. W. (1965). "Behavior of fasteners and plates with holes." *J. of the Structural Division*, ASCE, 91 (ST6), 265–286.

Marsh, C. (1979). "Tear-out failure of bolt groups." *J. of the Structural Division*, ASCE, 105 (ST10), 2122–2125.

Chapter 6

DETAILING AND FABRICATION

6.1 DETAILING

6.1.1 Drawings

Tower detail drawings consist of erection drawings, shop detail drawings, and bills of material. Erection drawings shall show the complete assembly of the structure indicating clearly the positioning of the members. Each member shall be piece-marked and the number and lengths of bolts shall be given for each connection. Shop detail drawings can either be shown by assembled sections (in place) or piece by piece (knocked down), either hand drawn or computer drawn. Layout drawings are required when details are not shown by assembled sections. Computer generated bills of material are generally acceptable.

Tower detail drawings are usually prepared by the fabricator or an independent detailer in accordance with the contract documents.

6.1.2 Approval of Shop Detail Drawings

Shop detail drawings shall be approved by the Engineer of Record (EOR) regarding compliance with the purchaser's specifications and the strength requirements of the design. The EOR shall be the utility structural engineer, a consulting structural engineer, or the fabricator's structural engineer, depending on who generated the structural tower design. The EOR's review and approval of the shop detail drawings includes responsibility for the strength of connections but does not pertain to the correctness of dimensional detail calculations which are the responsibility of the detailer. It also does not imply approval of means, methods, techniques, sequences, or procedure of construction, or of safety precautions and programs.

6.1.3 Connections

Usual detailing practice is to connect members directly to each other with minimum eccentricity. If specific joint details are required by the EOR they shall be shown on the design drawings as referenced in the contract documents.

6.1.4 Bolt Spacing

Minimum bolt spacing, and end and edge distances, as specified in the design sections of this document, shall not be underrun by mill or standard fabrication tolerances. The purchaser's specifications shall state if end distances, edge distances, and center-to-center hole spacing dimensions include provisions for mill and fabrication tolerances; if they do not, dimensions used for detailing must be adjusted to ensure that minimum dimensions are provided in the fabricated member.

6.1.5 Detail Failures During Testing

If a tower is tested and a structural failure occurs because of an inadequate connection detail, a review shall be made by the EOR to determine the reasons for the failure and to specify the required revisions.

6.1.6 Material

Detail drawings shall clearly specify member and connection materials such as ASTM specification and grade designation.

6.1.7 Weathering Steel

If the structure is made of weathering steel, special detailing procedures may be required; see Brockenbrough (1983) and Brockenbrough and Schmitt (1975).

6.1.8 Tension-Only Members

Tension-only members shall be detailed sufficiently short to provide draw. Draw must consider the length and size of the member. To facilitate erection, these members should have at least two bolts on one end. Members 15 ft in length, or less, are detailed 1/8 in. short. Members more than 15 ft long are detailed 1/8 in. short, plus 1/16 in. for each additional 10 ft or fraction thereof. If such members are spliced, the draw should provide for the slippage at the splice.

6.1.9 Shop Assembly

The purchaser's specifications should include a requirement for shop assembly of new tower details, to be done partially by sections and in the horizontal position. This helps validate detailing calculations and dimensions, minimize fit-up conflicts, and assure proper assembly in the field.

6.1.10 Other Considerations

All dimensions on detail drawings shall be shown in English units with dimensional accuracy to the nearest 1/16 in.

Welded connections and built-up components may require seal welds. Closed sections should be detailed with vent or drain holes if they are to be galvanized. Caution should be used to avoid explosive effects, which can injure workers or damage the component during the galvanizing process.

6.2 FABRICATION

6.2.1 Material

Since various steels are used in transmission towers, a quality control program is necessary and should start with the fabricator's purchase order. A36 steel is considered the basic steel. All other steels shall have a special marking starting at the mill, be inventoried separately at the fabrication plant, and be properly identified during the fabricating process. Mill test reports are usually kept on record and are sufficient as certification of material, unless the purchaser's specification calls for other requirements.

6.2.2 Specifications

Fabrication shall be performed according to the purchaser's specification. If this specification does not cover fabrication procedures, the latest edition of the AISC *Steel Construction Manual*, or other specifications applicable to transmission towers will be used. These documents provide a description of acceptable fabrication methods and procedures.

6.2.3 Shop Operations

Shop operations consist essentially of cutting (sawing, shearing, or flame cutting), punching, drilling, blocking or clipping, and either cold or hot bending. Hot bending will require steel to be heated to 1400–1600°F, if the steel is not produced to fine grain practice; see *The Making, Shaping and Treating of Steel* (1976).

Cold bending is normally done on pieces with simple bends at small bevels. Hot bending is necessary on pieces with moderate bevels and/or compound bends; heating should be done evenly and should be of sufficient length and temperature to minimize necking down of the section at the bend line. Pieces requiring bends at severe bevels may have to be cut, formed, and welded. Specific preparation instructions and welding symbols must be shown on the shop detail drawings in this case.

The actual position of any punched or drilled hole on a member shall not vary more than 1/32 in. from the position for that hole shown on the shop detail drawing.

The purchaser should review fabricators' quality control procedures and agree on methods before fabrication begins. If there is disagreement, this should be settled in writing prior to fabrication.

6.2.4 Piece Marks

Each tower member shall have a number conforming to the piece mark on the erection drawings stamped with a metal die. For galvanized material these marks shall be stamped prior to galvanizing. Marks shall be minimum of 1/2 in. high. For special pieces such as anchor bolts, where die stamping is not feasible, an indelible ink marking or special tagging which is durable and waterproof may be used. Some purchaser specifications require that higher strength steel members include a suffix such as "H", on the piece mark.

6.2.5 Welding

Welding procedures shall comply with ANSI/AWS D1.1. Special care shall be taken regarding seal welds to assure proper galvanizing and to avoid acid "bleeding" at pockets in structural assemblies.

6.2.6 Galvanizing

Galvanizing shall be in accordance with ASTM A-123 and A-153. Reference to ASTM A-143 will provide guidelines to avoid material embrittlement.

6.2.7 Shipping

The purchaser's specification shall clearly state the packing, bundling methods, and shipping procedures required.

REFERENCES AND BIBLIOGRAPHY

References

Brockenbrough, R. L. (1983). "Considerations in the design of bolted joints for weathering steel." *Engr. J.* Amer. Inst. of Steel Constr., 40–45.

Brockenbrough, R. L., and Schmitt, R. J. (1975). "Considerations in the performance of bare high-strength low-alloy steel transmission towers." *Paper C 75 041-9*, IEEE Power Engr. Soc., Winter Meeting, New York, N.Y.

The Making, Shaping, and Treating of Steel (1976). Eighth Ed. H. E. McGannon, ed., United States Steel Corp., Pittsburgh, Pa., 1035–1038.

Bibliography

Code of Standard Practice for Steel Buildings and Bridges (with Commentary). (1976). Amer. Inst. of Steel Constr., Inc., Chicago, Ill.

"Standard Specification for Zinc (Hot-Dip Galvanized) Coatings on Iron and Steel Products, Designation A 123." (1986). *Annual book of ASTM standards*, Section 1 Vol. 01.06, Amer. Soc. for Testing and Materials, Philadelphia, Pa.

"Standard Recommended Practice for Safeguarding Against Embrittlement of Hot-Dip Galvanized Structural Steel and Procedure for Detecting Embrittlement, Designation A 143." (1986). *Annual book of ASTM standards*, Section 1, Vol. 01.06, Amer. Soc. for Testing and Materials, Philadelphia, Pa.

Structural Welding Code—Steel (1986). ANSI/AWS D1.1-86, American Welding Society, Miami, Fla.

Chapter 7

TESTING

7.1 INTRODUCTION

Tower tests may be performed for various reasons. In a traditional proof test the test is set up to conform to the design conditions, that is, only static loads are applied, the tower has level, fixed foundations, and the restraints at the load points are the same as in the design model. If a proof test is ordered, it should be done on a full size prototype structure before that tower, or another tower of similar design for the same line, is fabricated in quantity. This kind of test will verify the adequacy of the members and their connections to withstand the static design loads specified for that structure as an individual entity under controlled conditions. Proof tests provide insight into actual stress distribution of unique configurations, fit-up verification, action of the structure in deflected positions, adequacy of connections, and other benefits. The test cannot confirm how the tower will react in the transmission line where the loads may be dynamic, the foundations may be less than ideal, and where there is some restraint from intact wires at the load points.

The following guidelines are based on performing a proof test using a test frame that has facilities to anchor a single tower to a fixed base, load and monitor pulling lines in the vertical, transverse, and longitudinal directions, and measure deflections.

7.2 FOUNDATIONS

Tests shall be made with the tower on rigid foundations. The EOR and the test facility engineer should establish allowable setting tolerances. Positioning of the footings shall be checked to ensure that accurate alignment prevents any abnormal stresses in the tower members.

7.3 MATERIAL

For a test, the structure shall be made of material that is representative of the material that will be used in the production towers. Mill test reports or coupon tests shall be available for all important members in the tower including as a minimum the members designed for only tension loading and compression members with a *KL/r* less than 120.

Proper interpretation of the data obtained from testing is critical in establishing the true capacity of individual members. There is concern about using members in a test tower which have yield points considerably higher than the minimum guaranteed yield value that is used as the basis for design. The actual yield points of tension members and of compression members with *KL/r* values less than 120 are critical in determining the member capacity. Consequently, the guidelines shown in Fig. 7.1 are suggested as a basis for determining the maximum yield point values for these members of the test tower. All other members of the test tower must conform to the standard material specifications, but their actual yield points are not as critical to their load-carrying capabilities.

7.4 FABRICATION

Fabrication of the prototype tower shall be done in the same manner as for the towers in the production run. A tower that is specified to be galvanized for the transmission line need not be galvanized for the test, but the purchaser has the option of specifying that the test tower must be galvanized.

7.5 STRAIN MEASUREMENTS

Stress determination methods, primarily strain gaging, may be used to monitor the loads in individual members during testing. Comparison of the measured unit stress to the predicted unit stress is useful in validating the proof test and refining analysis methods. Care must be exercised when instrumenting with strain gages, both as to location and number, to assure valid correlation with design stress levels.

7.6 ASSEMBLY AND ERECTION

The method of assembly of the test tower shall be specified by the purchaser. If tight bolting of subassemblies is not permitted by the construction specifications, the test tower shall be assembled and erected with all bolts finger tight only, and tightening to final torque shall be

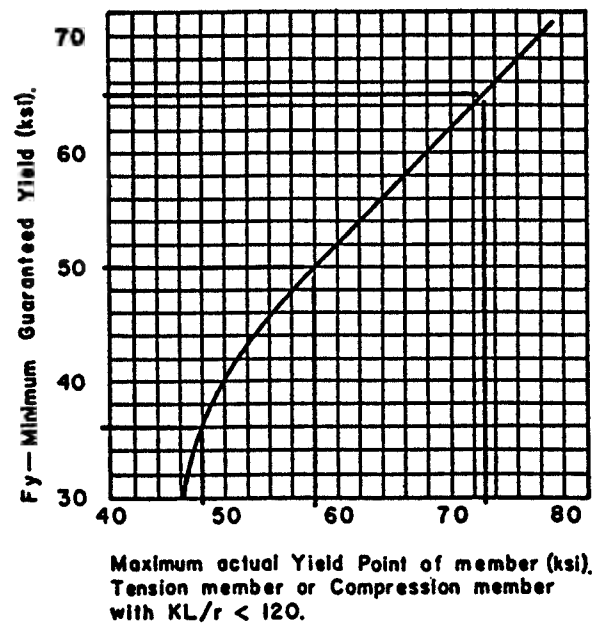

Fig. 7.1.—Maximum Overstrengths

done after all tower members are in place. Pick-up points that are designed into the tower shall be used during erection as part of the test procedure. The erected tower shall conform with the special requirements of the purchaser's instructions; many purchasers specify minimum torque for bolt tightening, and that the vertical axis shall not be out of plumb by more than 1 in. for every 40 ft of height.

7.7 TEST LOADS

The loads to be applied to the test tower shall be the load cases specified for design and shall include all overload capacity factors. The test specifications shall state if the tower is to be tested to destruction. Wind-on-tower loads shall be applied as concentrated loads at selected panel points on the tower. These loads shall be applied at panel points where stressed members intersect so that the loads can be resisted by the main structural system of the tower. The magnitudes and points of application of all loads shall be designated by the responsible engineer and approved by the purchaser. In some cases the responsible engineer may be the Engineer of Record (EOR).

7.8 LOAD APPLICATION

Load lines shall be attached to the load points on the test tower in a manner that simulates the in-service application as close as possible. The attachment hardware for the test shall have the same degrees of freedom as the in-service hardware. V-type insulator strings shall be loaded at the point where the insulator strings intersect. If the insulators for the towers in the line are V-type strings that will not support compression, it is recommended that articulated bars or wire rope slings be used to simulate the insulators. If compression or cantilever insulators are planned for the towers, members that simulate those conditions should be used in the test. Compression on unbraced panels due to bridling of load lines shall be avoided.

As a structure deflects under load, load lines may change their direction of pull. Adjustments must be made in the applied loads or the test rigging shall be offset accordingly, so that the vertical, transverse, and longitudinal vectors at the deflected load points are the loads specified in the tower loading schedule.

7.9 LOADING PROCEDURE

The number and sequence of load cases tested shall be specified by the responsible engineer and approved by the purchaser. It is recommended that those load cases having the least influence on the results of successive tests be tested first. The sequence should simplify the operations necessary to carry out the test program.

Loads are normally incremented to 50%, 75%, 90%, 95%, and 100% of the maximum specified loads. After each increment is applied there shall be a "hold" to allow time for reading deflections and to permit the engineers observing the test to check for signs of structural distress. The 100% load for each load case shall be held for five minutes.

Loads shall be removed completely between test load cases except for noncritical load cases where, with the responsible engineer's permission, the loads may be adjusted as required for the next load case. Unloading of the tower shall be controlled to avoid overstressing any members.

7.10 LOAD MEASUREMENT

All applied loads shall be measured as close to the point of attachment to the tower as possible. Loads shall be measured through a suitable arrangement of strain devices or by predetermined dead weights. The effects of pulley friction should be minimized. Load measurement by monitoring the load in a single part of a multipart block and tackle arrangement should be avoided. Strain devices shall be used in accordance with manufacturer's recommendations and calibrated prior to and after the conclusion of the tower testing.

7.11 DEFLECTIONS

Tower deflections under load shall be measured and recorded except as waived by the responsible engineer. Points to be monitored shall be selected to verify the deflections predicted by the design analysis. Deflection readings shall be made for the before and off load conditions as well as at all intermediate holds during loading.

All deflections shall be referenced to common base readings such as the initial plumb positions taken before any test loads are applied.

7.12 FAILURES

When a premature structural failure occurs, the cause of the failure mechanism and the corrective measures to be taken shall be determined in conjunction with the EOR.

Failed members and members affected by consequential damage shall be replaced. The load case which caused the failure shall be repeated. Load cases previously completed need not be repeated.

After the tower has successfully withstood all load cases the tower shall be dismantled and all members inspected. The following shall not be considered as a failure:

a. Residual bowing of members designed for only tension.
b. Ovalization of no more than one-half the holes in a connection.
c. Slight permanent deformation of no more than one-half the bolts in a connection.

7.13 DISPOSITION OF TEST TOWER

The test specifications should state what use, if any, may be made of the test tower after the test is completed. An undamaged tower is usually accepted for use in the line after all components are visually inspected and found to be structurally sound and within tolerances. If a test exceeding the design loads has been performed, caution should be exercised in accepting the parts that appear to be undamaged since they may have been overstressed.

7.14 REPORT

The testing organization shall furnish the number of copies required by the job specifications of a test report that should include:

a. The designation and description of the tower tested.
b. The name of the utility that will use the tower.
c. The name of the person or organization (responsible engineer) that specified the loading, electrical clearances, technical requirements, and general arrangement of the tower.
d. The name of the Engineer of Record.
e. The name of the fabricator.
f. A brief description and the location of the test frame.
g. The names and affiliations of the test witnesses.
h. The dates of each test load case.
i. Design and detail drawings of the test tower including any changes made during the testing program.
j. A rigging diagram with details of the points of attachment to the tower.
k. Calibration records of the load-measuring devices.
l. A loading diagram for each load case tested.
m. A tabulation of deflections for each load case tested.
n. In case of failure:
   Photographs of the failure.
   Loads at the time of failure.
   A brief description of the failure.
   The remedial actions taken.
   The physical dimensions of the failed members.
   Test coupon reports of failed members.
o. Photographs of the overall testing arrangement and rigging.
p. Air temperature, wind speed and direction, any precipitation, and any other pertinent meteorological data.
q. Mill test reports as submitted due to the requirements of Section 7.3.
r. Additional information specified by the purchaser.

BIBLIOGRAPHY

Arnold, F. (1985). "Strain gaging and data acquisition at TLMRF." *Proc. Conf. on Innovations in the Design of Electrical Transmission Structures*, Struct. Div., ASCE, Kansas City, Mo., Aug., 116–125.

Lemaster, R. A. (1985). "TLMRF research initiatives." *Proc. Conf. on Innovations in the Design of Electrical Transmission Structures*, Struct. Div., ASCE, Kansas City, Mo., Aug, 106–115.

Loading Tests on Overhead Line Towers. (1979). IEC Standard Publication 652, Int. Electrotech. Comm., Geneva, Switzerland.

Mueller, W. H., Prickett, S. L., and Kempner, L. (1985). "Nonlinear analysis and full scale test of a transmission tower." *Research Report*, Bonneville Power Administration.

Peyrot, A. H. (1985). "Strength data base for LRFD of transmission lines." *Proc. Conf. on Innovations in the Design of Electrical Transmission Structures*, Struct. Div., ASCE, Kansas City, Mo., Aug., 126–134.

"Recommendations for and Guide to Full-Scale Testing of Transmission Line Structures." (1973). Task Group on Line Loading and Strength for Transmission Line Structures, *Paper C 73 005-6*, IEEE Power Engr. Soc., Winter Meeting, New York, N.Y.

"Structural Development Studies at the EPRI Transmission Line Mechanical Research Facility." (1986). *Interim Report 1, Report EL-4756* Electric Power Res. Inst., Palo Alto, Calif.

Wilhoite, G. M. (1964). "Tests verify design for TVA's 500-kV towers." *J. of the Power Division*, ASCE, 90(P03), 81–90.

Chapter 8

QUALITY ASSURANCE (QA)–QUALITY CONTROL (QC)

8.1 INTRODUCTION

A well planned and executed quality assurance (QA)–quality control (QC) program is necessary to ensure delivery of acceptable material in a timely manner. The objective of the program is to establish that transmission material is in conformance with the specifications of the purchase contract. A clear and concise contract between purchaser and supplier is an important part of the procedure necessary to obtain acceptable transmission towers. It is helpful if the responsibilities of both the purchaser and the supplier can be defined in the contract so that no part of the process used to purchase, design, detail, test, fabricate, and deliver transmission material is omitted. Purchasers and suppliers have in-house quality assurance–quality control programs. In this Manual the purchaser's program is defined as quality assurance (QA) and the supplier's program is defined as quality control (QC). This Manual provides some suggestions for the preparation of specifications which include QA-QC program requirements.

The purchaser's QA program outlines the methods, types of inspections, and records that are necessary to provide suitable production controls. The purchaser should advise the supplier of this information in the bid document to ensure proper coordination of the QA program with the supplier's QC program. Often this coordination is accomplished before a supplier is allowed to bid on a contract.

The supplier's QC program is a written document or a series of informal memorandums that establish procedures and methods of operation which affect the quality of the product. The supplier has complete control over this QC program and modifies it to adjust to changing requirements of a particular operation. The purchaser should review the QC program to be certain that it is satisfactory for the purpose of the contract.

8.2 QUALITY ASSURANCE (QA) PROGRAM

Quality assurance is responsible for the methods followed to establish appropriate review and interface with the supplier's quality control procedures. This will ensure that the contract can proceed smoothly; that proper communication channels are established with the responsible personnel to minimize confusion; that the purchaser's requirements are properly met; and to provide proper guidance and adequate technical support throughout the period of the contract.

To establish effective coordination with the supplier, the purchaser must clearly define personnel that have the responsibility for contract performance, engineering, inspection, and receipt of material.

a. Contract performance covers enforcement of the terms of the contract relative to payment, delivery commitments, contract changes, and legal matters.
b. Engineering covers technical matters relative to design adequacy, detail requirements, production controls, structure testing, and shipment of material.
c. Inspection covers the purchaser's material certification and production requirements. This requires a close in-shop relationship with the supplier. In some instances, the purchaser utilizes contract personnel for this activity.
d. Receipt of material by the purchaser's designated representative covers invoice certification that correct material has been received in the field.

8.3 QUALITY CONTROL (QC) PROGRAM

The program must be established in a manner that provides open avenues of communication throughout the plant. It is headed by a manager with the overall authority and responsibility to establish, review, maintain, and enforce the program. As a minimum, key personnel are responsible for planning and scheduling, engineering, drafting, purchasing, production, shipping and appropriate quality control checks.

a. Planning and scheduling is responsible for assuring that the work proceeds in an orderly manner.
b. Engineering is responsible for specification, design, and shop drawing review in accordance with accepted standards and loading criteria. Engineering shall also assure that the appropriate revision of all applicable codes and drawings are used by all parties.
c. Drafting covers shop detail drawings which correctly and adequately interpret the design drawing and specifications. These drawings shall be reviewed and approved by the purchaser and the Engineer of Record (EOR).
d. Purchasing secures appropriate materials and services in accordance with the requirements of the contract drawings and specification. Normally

copies of the material orders are provided to the purchaser's representative. Accepted material shall be marked for identification and inventoried. Documentation such as test reports, mill certificates, and letters of compliance shall be retained on file.

e. Production is responsible for all fabricating activities, receipt of material, storage, material preparation, processing, marking, welding, galvanizing, assembly, and shipping. All operations shall be performed in accordance with drawings reflecting the appropriate revisions. All procedures shall be in compliance with the specifications, drawings, and applicable codes.

8.4 ACTIVITIES NORMALLY COVERED.

8.4.1 Preliminary Review

A joint review should be made and agreement reached on all QA–QC requirements prior to ordering any material. When the purchaser has prior experience with the supplier, a satisfactory procedure may already exist; if not, basic procedures should be jointly established.

8.4.2 Materials and Subcontracts

Agreement should cover the requirements for review and acceptance of the supplier's material specifications, sources of supply, material identification, storage, traceability procedures, and acceptance of certified mill test reports.

8.4.3 Inspection

The purchaser should specify that a designated representative will inspect the supplier's equipment and facilities to ensure that the procedures followed during production meet the specific job requirements. The inspection should cover material certification, material handling, cutting and piece mark identification procedures, bending, welding, nondestructive testing required, galvanizing, fit-up requirements, and bundling for shipment.

8.4.4 Tolerances

The purchaser has the responsibility to establish the allowable tolerances, and the supplier has the responsibility to ensure that the requirements are met in the finished product.

BIBLIOGRAPHY

AISC Quality Certification Program. (1980). Amer. Inst. of Steel Const., Inc., Chicago, Ill.

Chapter 9

FOUNDATIONS

9.1 INTRODUCTION

Foundation design requires competent engineering judgment and experience. The most effective foundation design will be achieved by those who understand how tower loadings relate to foundation performance and reliability, and how they can be integrated to make an economical installation. Soil data interpretation is critical and engineers will design foundations differently based on different geotechnical models. Foundation costs vary considerably depending on the line location and the soil conditions encountered.

Soil and rock properties can vary significantly along a transmission line, making the evaluation of geotechnical parameters uncertain. In addition, construction variables, such as installation procedures and backfill compaction, greatly influence the foundation performance.

Structural steel and concrete have well defined physical properties and the coefficients of variation are normally small. However, geotechnical parameters may have large coefficients of variation and evaluation can be uncertain.

The Institute of Electrical and Electronics Engineers (IEEE) has published a *Trial-Use Guide for Transmission Structure Foundation Design* (1985) on the geotechnical aspects of foundation design. The Electric Power Research Institute published a comprehensive study on transmission tower foundation design (Transmission Line Structure 1983) covering extensive research and references.

9.2 FOUNDATION DESIGN AND PERFORMANCE CRITERIA

9.2.1 Load and Overload Capacity Factors

The *National Electrical Safety Code* (1987) and *Guidelines for Transmission Line Structural Loading* (1984) provide guidance for determining the tower design

loads. For the foundation design, some engineers apply a small additional factor to the tower reactions to compensate for variability in ultimate values of soil or rock. It is recommended that the ultimate design stresses of ACI 318 (*Building Code Requirements* 1983) be used for the design of concrete and reinforcing steel using unfactored loads times the overload capacity factors used in the tower designs instead of ACI load factors. The tower design should indicate the load conditions and reaction values of uplift, downthrust, and shear for the governing conditions.

9.2.2 Differential Movement

When the foundations of a tower displace and the geometric relationship of the tower to its foundations remains the same, any increase in load due to this displacement will have a minimal effect on the tower and its foundation. However, foundation movements which change the geometric relationship will cause a redistribution of loads. This will usually cause greater reactions on the foundation that moves least, which in turn will tend to reduce the differential displacement. Sowers (1979) gives a suggested limitation.

Normally, the effects of foundation movements are not included in the tower design. Several options are available should the engineer decide to consider them. These options include designing the foundations to satisfy performance criteria which will not cause significant secondary loads on the tower, or to design the tower to withstand specified differential foundation movements. The ratio of tower height to base width often determines the allowable movement of the footing. As this ratio increases, foundation settlements must be more carefully controlled.

Member stresses in guyed towers are less affected by differential foundation movement and setting tolerances than member stresses of self-supporting towers; as a result, foundation performance can be less rigid. For guyed towers, excessive movement can affect clearances from the conductor to the tower or to the ground.

9.2.3 Unequal Height Leg Extensions

Where there are unequal leg extensions, the shear taken by the shorter leg extension can be greater and can create larger loads in lower bracing members. The tower should be analyzed with the extreme leg combinations that are used on a single structure. The larger loads may be used in foundation design or the foundation can be designed for the specific site loads.

9.2.4 Deterioration Considerations

Steel exposed to corrosion at the ground level, or below, should have a minimum thickness of 3/16 in., if galvanized or otherwise protected.

Concrete foundations should be properly sloped to drain so that water pockets do not accumulate with ground material and cause excessive corrosion of the tower base material. If towers are located where ground water can be highly corrosive, such as ash pits, industrial drainage areas, and oil refineries, concrete foundations should be used. If steel is exposed to such a ground water environment, special protection is essential. Proper drainage around the steel should be established and periodic inspections conducted. In some cases, it may be necessary to apply an additional protective coating such as a bitumastic compound to the steel. If new towers are located in this environment, any steel members exposed to this severe ground condition should be increased in thickness a minimum of 1/16 in. as a corrosion allowance.

9.3 SUBSURFACE INVESTIGATION

To select and design the most economical type of foundation for a specific location, soil conditions at that site should be determined through existing site knowledge or new explorations. The cost of new field and laboratory soil investigations is small compared to the line cost per mile. Inspection during construction should also be considered to verify that the selected soil parameters are within the design limits.

The subsurface investigation program should be consistent with foundation loads, experience in the right-of-way conditions, variability of soil conditions, and the desired level of reliability. A cost benefit analysis can be made to obtain the optimum level for additional soil exploration investigations. For a given level of reliability, the optimum exploration level would be where the cost of the foundation plus the exploration is the least. On many lines, full-scale foundation tests can reduce foundation costs and maintain the same level of reliability. The *IEEE Trial-Use Guide* (1985) and the "Transmission Line Structure Foundations" (1983) provide discussions on subsurface investigations.

9.4 FOUNDATION TYPES

There are many types of tower and guy foundations: steel grillage footings; pressed plates; concrete spread footings; precast concrete; rock foundations; drilled-shaft foundations; pile foundations; and anchors. A description of these foundations is available in the *IEEE Trial-Use Guide* (1985).

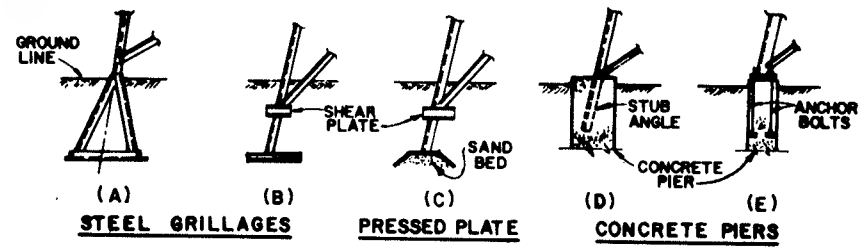

FIG. 9.1. – Typical Foundations

9.5 GENERAL CONSIDERATIONS

9.5.1 Steel Grillage

The members forming the pyramid shown in Fig. 9.1(a) do not rely on lateral support from the surrounding soil. The stub angle, or leg member in Fig. 9.1(b) is designed assuming support at the shear plate and the base of the grillage.

9.5.2 Pressed Plate

The stub angle, or leg member shown in Fig. 9.1(c) is designed assuming support at the pressed base plate and the shear plate. A relatively thick steel plate washer is welded to the bottom of the stub angle. This allows an attachment for bolting to the pressed plate and provides a transfer of the axial load from the stub angle to the corners of the pressed plate.

9.5.3 Concrete Foundations with Anchor Bolts

9.5.3.1 Smooth Bar Anchor Bolts

The tensile load in the anchor bolt shown in Fig. 9.1(e) is transferred to the concrete by the end connection. When the base plate is in contact with the concrete, the shear load in the base is transferred to the concrete by shear friction based upon the clamping force on the base plate.

9.5.3.2 Deformed Bar Anchor Bolts

If the anchor bolt has sufficient embedment length, the tensile load is transferred to the concrete by a bond between the concrete and the bolt. When the base plate is in contact with the concrete, the shear load in the base is transferred to the concrete by shear friction based upon the clamping force on the base plate.

9.5.3.3 Compressive Load Transfer with Anchor Bolts

Normally, base plates are used to transfer downthrust loads to the concrete. Some utilities place the base plate directly on the concrete with nuts installed on top of the base plate. Other utilities use a leveling nut on the anchor bolts under the base plate and a nut on top of the base plate; grout is installed later to provide support for the base plate and the anchor bolt and to permit shear friction transfer. Another commonly used method is to support the base plate directly on the anchor bolt nuts; the shear load in the anchorage must be transferred to the concrete by the side bearing pressure of the anchor bolt, if the base plate is not in contact with the concrete or grout.

9.5.4 Concrete Foundations with Stub Angles

The tensile and compressive load in the stub angle shown in Fig. 9.1(d) is transferred to the concrete by the shear connectors shown in Fig. 9.2. The shear load is transferred by the side bearing pressure on the concrete.

9.6 DESIGN CONSIDERATIONS FOR STRUCTURAL MEMBERS

The design recommendations for structural members of grillages, pressed plates, anchor bolts, and stub angles are specified in Chapter 4.0.

The ACI *Code Requirements for Nuclear Safety* (1985) base anchorage requirements for design on F_u of the anchorage material; this is to ensure that a ductile failure occurs in the structural material instead of a brittle failure in the concrete. ACI recommendations can be used for determining the anchorage requirements. In this Manual, where ACI formulas are specified, F_u and f'_c have been converted to ksi units.

9.6.1 Anchor Bolts with Base Plates on Concrete or Grout

The area of steel required for tension and shear shall be

$$A_s = \frac{T}{F_y} + \frac{V}{(u)\,0.85\,F_y} \tag{9.6-1}$$

The stress area, A_s, is given by

$$\frac{\pi}{4}\left[d - \frac{0.974}{n}\right]^2 \tag{9.6-2}$$

where T = tensile load on the anchor bolt (kips); V = shear load perpendicular to the anchor bolt (kips); F_y = specified minimum yield strength of anchor bolt (ksi); d = nominal diameter (in.); n = the number of threads per inch; and u = coefficient of friction, see Fig. 9.3.

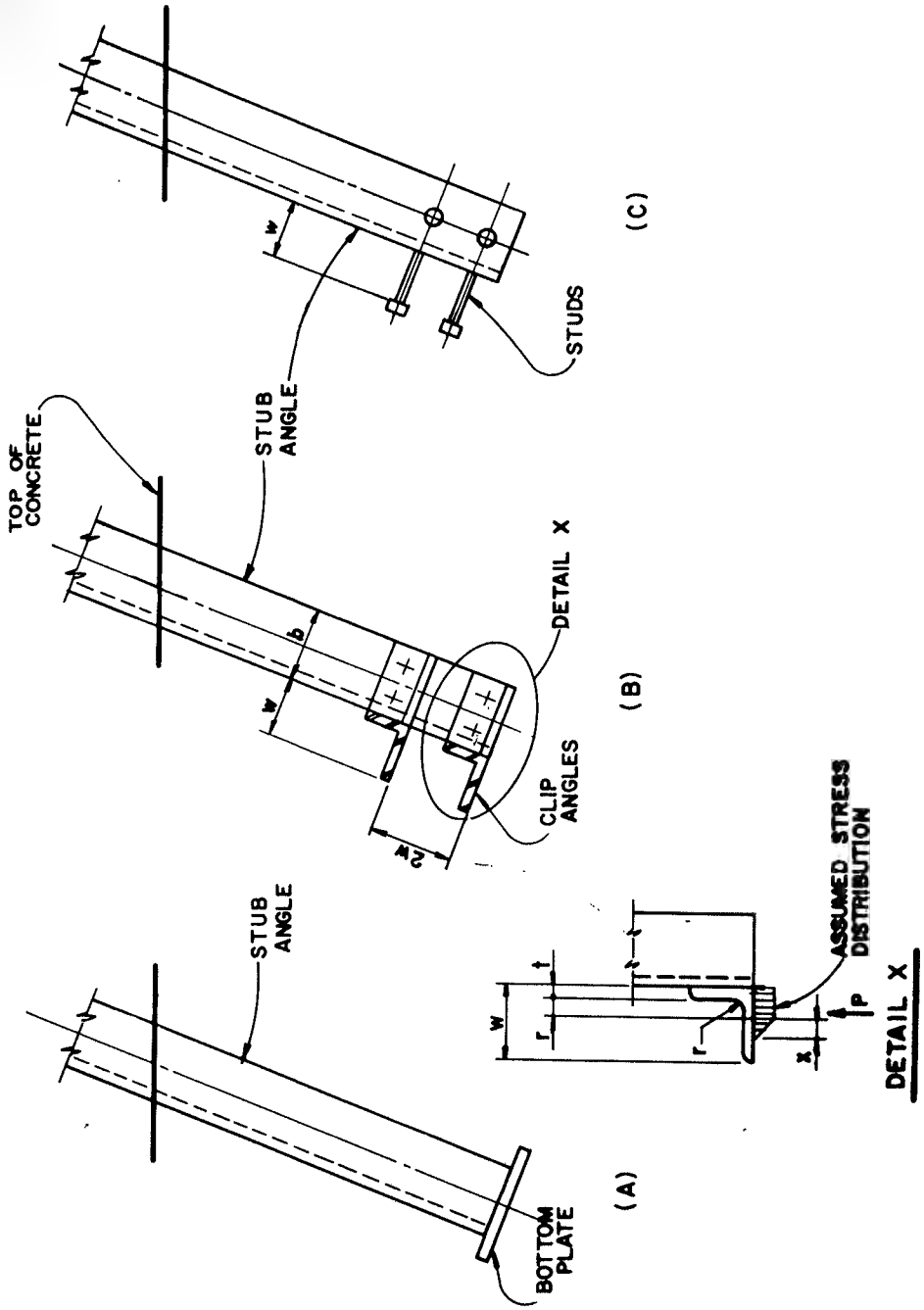

FIG. 9.2.—*Stub Angles*

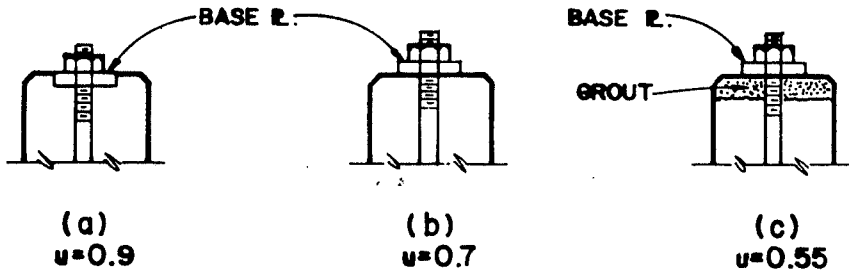

FIG. 9.3.—Coefficient of Friction (μ) Values for various Conditions

Values for u are:

a. 0.9 for concrete or grout against as-rolled steel with the contact plane a full plate thickness below the concrete surface.
b. 0.7 for concrete or grout placed against as-rolled steel with contact plane coincidental with the concrete surface.
c. 0.55 for grouted conditions with the contact plane between grout and as-rolled steel above the concrete surface.

Under certain conditions, anchor bolt bases may be subjected to downthrust and shear loads only. The shear friction may induce tension in the anchor bolts; consequently anchor bolts shall be checked as follows:

$$A_s = \frac{V - 0.35\,D}{(u)\,F_y} \qquad (9.6\text{–}3)$$

where D = downthrust load, in kips (the net difference in compressive and uplift reactions) and the other terms are defined previously in this section.

9.6.2 Base Plates Supported by Anchor Bolts

Anchor bolts used in this application must be checked for a combination of tension, bending, and shear, or compression, bending, and shear. If the anchor bolt projection from the concrete is excessive, the compressive load can determine the controlling stress.

9.6.3 Stub Angles in Concrete

The stub angle area shall be checked for a combination of tension and shear, or compression and shear, as follows:

$$A_n = \frac{P}{F_y} + \frac{V}{0.75\,F_y} \qquad (9.6\text{–}4)$$

where A_n = net area of angle (sq. in.); P = tensile or compressive load on the angle (kips); V = shear load perpendicular to the angle (kips); and F_y = specified minimum yield strength of stub angle (ksi).

9.7 DEVELOPMENT OF ANCHOR BOLTS AND STUB ANGLES IN THE CONCRETE FOUNDATION

9.7.1 Smooth Bar Anchor Bolts

The anchorage value is limited by the pull-out strength of the concrete based on a uniform tensile stress, in ksi, of $0.126\,\phi\sqrt{f'_c}$ acting on an effective stress area, which is defined by the projected area of stress cones radiating towards the surface from the bearing edge of the anchors. The effective area is limited by overlapping stress cones, by the intersection of the cones with concrete surfaces, by the bearing area of anchor heads, and by the overall thickness of the concrete. The angle for calculating projected area shall be 45°. The ϕ factor shall be taken as 0.65 for an embedded anchor head. If there is more than one bolt in a line, the effective area is limited by any overlapping stress cones.

The anchor head of the bolt can be a nut, bolt head, or plate (*Code Requirements for Nuclear Safety* 1985). The bearing requirements (*Building Code Requirements* 1983) do not have to be met if the anchor head satisfies the following conditions:

a. The bearing area of the anchor head (excluding the area of the tensile stress component) is at least 1.5 times the area of the tensile stress component.
b. The thickness of the anchor head is at least 1.0 times the greatest dimension from the outermost bearing edge of the anchor head to the face of the tensile stress component.
c. The bearing area of the anchor head is approximately evenly distributed around the perimeter of the tensile stress component.

The minimum embedment depth shall be $12d\sqrt{F_u/58}$ (but not less than the bolt spacing) where d = nominal diameter (in.); and F_u = specified minimum tensile strength (ksi).

9.7.2 Deformed Bar Anchor Bolts

The embedment for deformed bars that are threaded and used as anchor bolts shall be in accordance with ACI 318 (*Building Code Requirements* 1983). The length of embedment establishes the design method required. If the bond values fully develop the anchor bolt in tension, the side cover distance and the separation of anchor bolts should be in accordance with ACI requirements. If short anchor bolts are used with an end attachment, the anchorage shall be treated similar to a smooth bar. The edge distance for shear shall be as specified in Section 9.8.2.

If high tensile strength anchor bolts are used they are normally obtained with a minimum Charpy-V notch requirement of 15 ft-lbs at -20°F, when tested in the longitudinal direction.

9.7.3 Stub Angle Anchorages

If a bottom plate is used, as shown in Fig. 9.2(a), the procedure outlined in Sections, 9.6.3 and 9.7.1 should be followed. If shear connectors shown in Figs. 9.2(b) and 9.2(c) are used and spaced along the length of the stub angle, the recommendations of Section 9.9 shall be followed.

9.8 DETERMINATION OF CONCRETE DESIGN CONSIDERATIONS

9.8.1 Design of Side Cover Distances For Tension

The ACI *Code Requirements for Nuclear Safety* (1985) recommend the following side cover distance for tension to prevent failure due to lateral bursting for smooth anchor bolts:

$$m_t = 0.66d\sqrt{\frac{F_u}{\sqrt{f'_c}}} \qquad (9.8\text{–}1)$$

where m_t = minimum side cover distance from the center of the anchor bolt to the edge of the concrete (in.); F_u = specified minimum tensile strength of anchor bolt (ksi); d = diameter of anchor bolt (in.); and f'_c = specified minimum compressive strength of concrete (ksi).

Eq. 9.8-1 can be used for stub angles if an equivalent diameter is determined based on the net section of the stub angle; m_t shall be measured from any portion of the stub angle to the nearest edge of the concrete.

Reinforcement as shown in Fig. 9.4 assists in containing tension blowout.

9.8.2 Design of Side Cover Distance for Shear

The ACI *Code Requirements for Nuclear Safety* (1985) recommend the following side cover distance for anchorage shears:

$$m_v = 1.8d\sqrt{\frac{F_u}{\sqrt{f'_c}}} \qquad (9.8\text{–}2)$$

where m_v = minimum side cover distance for shear from the center of the anchorage to the edge of the concrete (in.). See Eq. 9.8-1 for definition of other terms.

For anchor bolts with base plates resting on concrete, shear is transmitted from the bolt to the concrete through bearing of the bolt at the surface

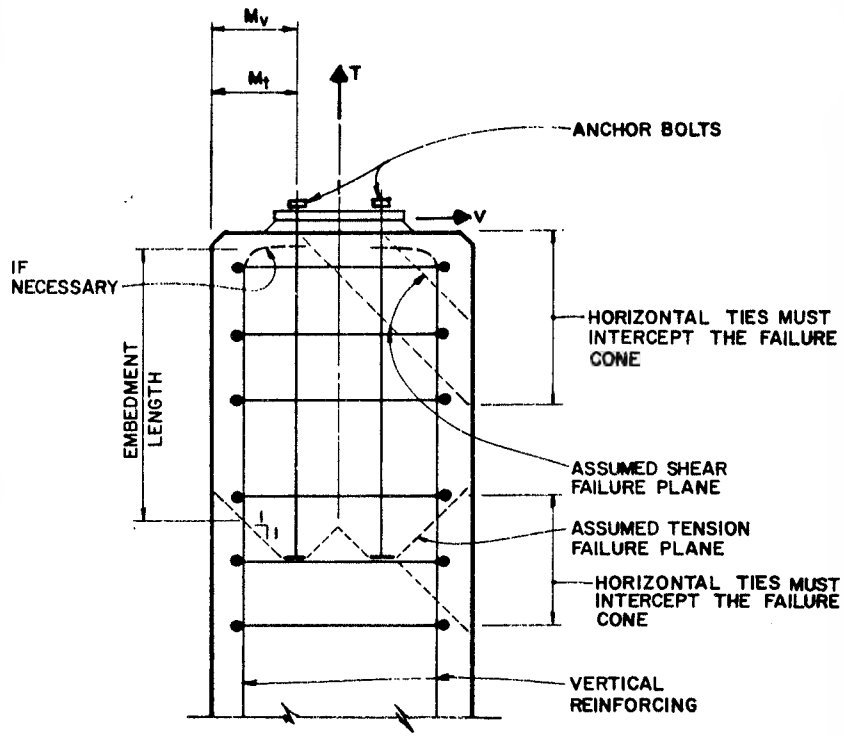

FIG. 9.4.—Pier Reinforcing

forming a concrete wedge. Translation of the wedge under the shear force cannot occur without an upward thrust of the wedge on the base plate. This thrust induces a clamping force, and this mechanism is called shear friction. Therefore, the concrete or grout serves in developing the clamping action. Shear lugs can also be used to transfer the shear load to the concrete and should be located in a concrete compression zone unless adequate reinforcing is provided. A combination of shear lugs and shear friction is not permitted.

In determining the side cover distance for shear, the anchor bolt diameter required for shear only can be used in Eq. 9.8-2. However, this distance should not be less than $m_v/3$ determined for the actual d of the anchor bolt used or 4 in.

Eq. 9.8-2 can be used for stub angles if an equivalent diameter is determined based on the net section of the stub angle; m_v shall be measured from any portion of the stub angle to the nearest edge of the concrete.

Reinforcement, as shown in Fig. 9.4, assists in containing shear blowout. An additional reference is Shipp and Haninger (1983).

9.8.3 Side Cover Distance for Tension and Shear Combined

Since the resultant strength of anchors subject to combined tension and shear is always less than the tensile or shear capacity alone determined in Sections 9.8.1 and 9.8.2, the edge distances determined by these sections are adequate for combined loads.

9.8.4 Other Considerations

On flat surfaces m_t and m_v are to the edge of the concrete. On round surfaces m_t and m_v can be taken to the intersecting chord surface of the 45° projecting lines and the round surface. If there is more than one bolt in a line, the effective area is limited by overlapping stress cones; see *Code Requirements for Nuclear Safety* (1985).

9.9 SHEAR CONNECTORS

9.9.1 Stud Shear Connectors, Fig. 9.2(c)

The capacity of a shear connector shall be determined by Eq. 9.9-1. All AISC requirements (*Manual of Steel Construction* 1986) for stud material and configuration, spacing, ratio of stud diameter to minimum thickness of material to which it is welded, and concrete properties and coverage must be met:

$$Q_n = 0.5\,\phi\,A_{sc}\sqrt{f'_c\,E_c} \qquad (9.9\text{–}1)$$

(Q_n shall not be greater than the stud shear capacity determined by Section 5.3) where $\phi = 0.85$; A_{sc} = cross-sectional area of a stud shear connector (in.^{2}); f'_c = specified compressive strength of concrete (ksi); and E_c = modulus of elasticity of concrete (ksi). (E_c, in ksi, may be computed from $E_c = w^{1.5}\,(f'_c)^{0.5}$ when w, the unit weight of concrete, is expressed in lbs/ft^3 and f'_c is expressed in ksi. Values are applicable only to concrete made with ASTM C33 aggregates). *Salmon and Johnson* (1980) provides supplementary background data.

9.9.2 Angle Shear Connectors, Fig. 9.2(b)

A rational design is as follows:

$$x = t\left[\frac{F_y}{1.19\,f'_c}\right]^{1/2} \qquad (9.9\text{–}2)$$

$$P = 1.19\,f'_c\,b\,[\,t + r + \frac{x}{2}\,] \qquad (9.9\text{–}3)$$

where F_y = specified minimum yield strength of steel (ksi); P = capacity of angle shear connector (kips); t = thickness of angle (in.); r = radius of fillet (in.); f'_c = compressive strength of concrete (ksi); b = length of angle (in.) (must be located symmetrically with the center of gravity at the leg); w = width of angle leg (in.); and $t + r + x \leq w$

The minimum center-to-center spacing of the shear connectors shall be $2w$.

The values obtained using this method are based on initial yielding of the angle in bending at a stress of 1.19 f'_c in the concrete. To develop its capacity, the shear connector must be fastened to the stub angle with sufficient bolts or welds to take both shear and moment.

9.9.3 Other Considerations

Reinforcements, as shown in Fig. 9.4, assist in distributing the load to the concrete pier.

9.10 TEST VERIFICATION

Design values and shapes other than those described in this chapter may be used if substantiated by experimental or analytical investigations.

REFERENCES AND BIBLIOGRAPHY

References

Building Code Requirements for Reinforced Concrete (with Commentary). (1983). ACI Committee 318, Publication Number 318-83, Amer. Concrete Inst., Detroit, Mich.

Code Requirements for Nuclear Safety Related Concrete Structures. (1985). "Appendix B with Commentary," ACI Committee 349, Publication Number 349-85, Amer. Concrete Inst., Detroit, Mich.

Guidelines for Transmission Line Structural Loading. (1984). Commit. on Elect. Transm. Struct. of Commit. on Anal. and Design of Struct. of Struct. Div., ASCE.

IEEE Trial-Use Guide for Transmission Structure Foundation Design. (1985). IEEE Standard 691, Inst. of Elect. and Electr. Engrs., Inc., New York, N.Y.

Manual of Steel Construction—Load and Resistance Factor Design. (1986). First Ed. Amer. Inst. of Steel Const. Inc., Chicago, Ill.

National Electrical Safety Code. (1987). Amer. Nat. Standard C2, Inst. of Elec. and Electr. Engrs., Inc., New York, N.Y.

Salmon, C. G., and Johnson, J. E. (1980). "Composite steel-concrete construction." *Steel structures, design and behavior*, Second Ed. Harper & Row, Publishers, New York, N.Y.

Shipp, J. G., and Haninger, E. R. (1983). "Design of headed anchor bolts." *Engrg. J.* Amer. Inst. of Steel Const., 58.

Sowers, G. F. (1979). *Introductory soil mechanics and foundations: Geotechnical engineering*, Fourth Ed. MacMillan Publishing Co., Inc., New York, N.Y.

"Transmission Line Structure Foundations for Uplift-Compression Loading." (1983). *Report EL-2870*, Electric Power Res. Inst., Palo Alto, Calif.

Bibliography

Adams, J. I., and Radhakrishna, H. S. (1976). "The uplift capacity of footings in transmission tower design." *Paper A 76 124-8*, IEEE Power Engrg. Soc., Winter Meeting, New York, N.Y.

Adams, J. I., Radhakrishna, H. S., and Klym, T. W. (1976). "The uplift capacity of anchors in transmission tower design." *Paper A 76 125-5*, IEEE Power Engrg. Soc., Winter Meeting, New York, N.Y.

"Bibliography on Transmission Tower Foundations." (1965). Task Force on Tower Foundations, *Paper 31 CP 65-710*, IEEE Power Group, Summer Meeting, Detroit, Mich.

Brandt, E., and Werse, E. (1984). "Load transfer of main leg tensile forces to foundations." *Proc. Int. Conf. on Large High Voltage Electric Systems*, CIGRE Paper 22-09, Aug.

Broms, B. B. (1964). "Lateral resistance of piles in cohesionless soils." *J. of the Soil Mechanics and Foundations Division*, ASCE, 90 (SM3), 123–156.

Broms, B. B. (1964). "Lateral resistance of piles in cohesive soils." *J. of the Soil Mechanics and Foundations Division*, ASCE, 90 (SM2), 27–63.

Broms, B. B. (1965). "Design of laterally loaded piles." *J. of the Soil Mechanics and Foundations Division*, ASCE, 91 (SM3), 79–99.

Cannon, R. W., Godfrey, D. A., and Moreadith, F. L. (1981). "Guide to the design of anchor bolts and other steel embedments." *Concrete Int.*, 3 (7).

Cauzillo, B. A., and Rendina, R. (1980). "Dynamic behavior of overhead line foundations." *Proc. Int. Conf. on Large High Voltage Electric Systems*, CIGRE Paper 22-07, Aug.

"Critical Evaluation of Design Methods for Foundations Under Axial Uplift and Compression Loading." (1984). *Report EL-3771*, Electric Power Res. Inst., Palo Alto, Calif.

"Design of Steel Piles to Resist Uplift and Lateral Loading." (1968). United States Steel Corp., Pittsburgh, Pa.

DiGioia, A. M., Donovan, T. D., and Davidson, H. L. (1977). "Site investigation and selection of geotechnical design parameters for transmission structure foundation design." *Paper A 77 252-0*, IEEE Power Engrg. Soc., Winter Meeting, New York, N.Y.

Downs, D. I., and Chieurzzi, R. (1966). "Transmission tower foundations." *J. Power Engrg.* , ASCE, 92 (P02), 91–114.

"Drilled Piers and Caissons." (1981). *Proc. Session Sponsored by the Geotechnical Engineering Division*, ASCE.

"Drilled Piers and Caissons II." (1985). *Proc. Session Sponsored by the Geotechnical Engineering Division*, ASCE.

Flucker, R. L., and Teng, W. C. (1965). "A study of transmission tower foundations." *Paper 31 CP 65-714*, IEEE Power Group, Summer Meeting, Detroit, Mich.

"Footing Tests for Transmission Towers—A Collection of Data." (1976). *Report No. SA-9, Bureau of Reclamation, Denver, Colo.*

Fritz, E. (1958). "A pattern for calculating transmission-line tower foundations." *Trans. Paper 58-540*, AIEE Transm. and Dist. Commit., Middle Eastern District Meeting, Washington, D.C.

Ismael, N. F., and Klym, T. W. (1978). "Uplift and lateral behavior of earth grillage foundations." *Paper A 78 508-4*, IEEE Power Engrg. Soc., Summer Meeting, Los Angeles, Calif.

Ismael, N. F., and Klym, T. W. (1981). "Lateral capacity of augered tower foundations in sand." *Paper 81 WM 209-6*, IEEE Power Engrg. Soc., Winter Meeting, Atlanta, Ga.

Ismael, N. F., Radhakrishna, H. S., and Klym, T. W. (1979). "Uplift capacity of rock anchor groups." *Paper F 79 272-6*, IEEE Power Engrg. Soc., Winter Meeting, New York, N.Y.

"Load Transfer Mechanisms in Rock Sockets and Anchors." (1984). *Report EL-3777*, Electric Power Res. Inst., Palo Alto, Calif.

Marsh, M. L., and Burdette, E. G. (1985). "Multiple bolt anchorages: Method for determining the effective projected area of overlapping stress cones." *Engr. J.*, Amer. Inst. of Steel Const., 29–32.

Marsh, M. L., and Burdette, E. G. (1985). "Anchorage of steel building components to concrete." *Engrg. J.*, Amer. Inst. of Steel Const., 33–39.

Marsico, R., Retallack, R. L., and Tedesco, P. A. (1976). "Report on pile testing for AEP transmission lines—Part I and Part II." *Papers F 76 192-5 and F 76 193-3*, IEEE Power Engrg. Soc., Winter Meeting, New York, N.Y.

Peixoto, C. A. O., Fernandes, D., Smith, J. G., and Monteiro, A. N. (1976) "Foundation testing for transmission lines." *Paper F 76 121-4*, IEEE Power Engrg. Soc., Winter Meeting, New York, N.Y.

Rawls, J. A., Rice, D. N., and Woodson, L. V. (1965). "An approach to transmission structure foundations." *Paper 31 CP 65-716*, IEEE Power Group, Summer Meeting, Detroit, Mich.

Seeman, T., and Gowans, R. (1977). "Guy anchor test project for Lyons 1100 kV test line." *Paper A 77 250-4*, IEEE Power Engrg. Soc., Winter Meeting, New York, N.Y.

Snow, A. A., LaGatta, D. P., and Lucia, P. C. (1980). "Anchored footings for transmission towers." *Paper A 80 031-5*, IEEE Power Engrg. Soc., Winter Meeting, New York, N.Y.

Stern, L. I., Bose, S. K., and King, R. D. (1976). "The uplift capacity of poured-in-place cylindrical foundations." *Paper A 76 053-9*, IEEE Power Engrg. Soc., Winter Meeting, New York, N.Y.

Tedesco, P. A. (1985). "IEEE/ASCE transmission structure foundation design guide." *Proc. Conf. on Innovations in the Design of Electrical Transmission Structures*, Struct. Div., ASCE, Kansas City, Mo., Aug., 96–105.

Teng, W. C., and Manuel, F. S. (1976). "Caisson foundations subjected to lateral forces." *Paper F 76 082-8*, IEEE Power Engrg. Soc., Winter Meeting, New York, N.Y.

Transmission Design Manual. (1970). Section 53.8, "Footings and guy anchors," Bonneville Power Administration, Portland, Oreg.

Transmission Structures. (1965). Design Standards No. 10, Chapter 2, "Concrete footing design and details," Bureau of Reclamation, Denver, Colo.

"Transmission Structure Foundation Test Results for Various Types and Locations." (1976). Task Group on Line Loading and Strength of Transmission Line Structures, *Paper A 76 185-9*, IEEE Power Engrg. Soc., Winter Meeting, New York, N.Y.

Turner, E. A. (1962). "Uplift resistance of transmission tower footings." *J. Power Engrg.* , ASCE, 88 (P02), 17–33.

Udwari, J. J., Rodgers, T. E., and Singh, H. (1979). "A rational approach to the design of high capacity multi-helix screw anchors." *Proc. 7th IEEE/PES Transmission and Distribution Conf. and Exposition*, Apr., 606–610.

"Uplift Behavior of Anchor Foundations in Soil." (1985). *Proc. Session Sponsored by the Geotech. Engrg. Div.* ASCE, Detroit, Mich., Oct.

Wiggins, R. L. (1969). "Analysis and design of tower foundations." *J. Power Division*, ASCE, 95 (P01), 77–100.

Chapter 10

CONSTRUCTION AND MAINTENANCE

10.1 INTRODUCTION

The initial construction and subsequent maintenance of a transmission structure are important considerations for the designer. Good construction practice, along with appropriate field control, will help to ensure that structures perform as expected. Structural features which may aid in the performance of certain construction methods and utility maintenance practices can be accommodated in the original tower design if these needs are conveyed with the design requirements. The following discussion of construction and maintenance activities highlights some considerations which should be conveyed to the tower engineer and reflected in the design. The discussion is limited to those aspects affecting design and performance.

10.2 CONSTRUCTION

10.2.1 General

10.2.1.1 Construction Management

A transmission line construction project is fundamentally a series of independent projects at many widely spaced sites. Many of the activities at each site are repetitive in nature, requiring coordination and scheduling of materials and specialty work crews. Thus a well planned communication network with an emergency backup is essential. Project control should include scheduling of activities, receiving, storing, inspection, acceptance criteria for construction units, and records. The contractor's methods and procedures to assure compliance with the plans and specifications should be reviewed by the utility or their appointed representative. Job records should be periodically reviewed to ensure acceptance of work completed.

10.2.1.2 Scope of Work

Proper procedures and controls are essential if structures are to effectively serve their intended use. Careful attention must be given to the following activities:

a. Material receiving, storing, and transporting.
b. Foundation installation.
c. Tower erection.
d. Wire stringing.
e. Inspection.

10.2.2 Materials and Material Handling

10.2.2.1 Marshalling Yard

Activities at the marshalling yard include unloading, inspecting, inventorying, and storing all materials. Any special unloading instructions should be followed. Material should be inspected to conform with the shipping manifest. Damaged material should be rejected and arrangements made to expedite replacements. A determination of material requiring special protection should be made so that appropriate storage is provided. In order to reduce delays and cost overruns, all material should be on hand and in good condition before installation is begun. Material stored in the open should be protected from the ground with wood blocking.

10.2.2.2 Tower Sites

Laydown areas at each site are normally prearranged. A sketch showing material placement is helpful for the unloading crew. Tower material should be arranged to minimize rehandling and checked for shortages or damaged members. The members or tower components should be located within reach of the erection equipment. Lifting of tower members during unloading or moving must be conducted in a manner which will not damage the members. If special handling or erection procedures are to be followed, they should be outlined on the erection drawing, or appropriate sketches provided the crews. Tower members should not be dragged across the ground. In particular, all joints should be clean of mud or other foreign material before assembly; see *IEEE Guide to the Assembly* (1985).

10.2.3 Foundations

10.2.3.1 General

Foundation performance and the resulting effects on the tower structure are dependent on the type of foundation, method of construction, and the type and magnitude of the load. Hence the tower engineer

should have an understanding of the more typical foundation types and how they are constructed. Foundation construction effects are outlined in Tables 10.1 and 10.2. "Transmission Line Structure Foundations" (1983) outlines additional considerations. An extensive treatment of foundation design and certain construction considerations can be found in the *IEEE Trial-Use Guide* (1985). Safety requirements for excavations can be found in "Excavations, Trenching and Shoring" (1987).

10.2.3.2 Subsurface Investigations

Subsurface investigations are useful to the contractor in evaluating the degree of construction difficulty and determining the equipment necessary to perform the work. The field engineer should verify that the actual subsurface conditions are representative of the test hole borings or other subsurface investigations. Where differences occur, the foundation engineer should be promptly notified.

10.2.3.3 Foundations and Anchors

Typical foundations are outlined in Chapter 9.0. The contractor must be informed of special requirements so that adequate instructions can be provided to field personnel. Table 10.1 provides a quick reference of some of the items that may need special instructions. Other items which should be covered in the construction specifications are:

a. Foundations should rest on undisturbed material or engineered backfill.
b. Shoring should be provided in deeper foundations to adequately protect workers in the excavation "Excavations, Trenching and Shoring" (1987).
c. It is important to obtain a backfill density equal to the *in-situ* material "Transmission Line Structure Foundations" (1983). Some utilities specify that backfill material must be clean sound soil, free of organic material and cohesive material which cannot be readily compacted and be compacted in layers of approximately 6 in.
d. Open excavation can lead to strength reduction in some soils which may result in cave-ins. More detailed information can be obtained from *IEEE Trial-Use Guide* (1985), *Standard Specification for End Bearing* (1979), *Suggested Design and Construction Procedures* (1972), and Woodward et al. (1972).
e. Where piling is required, an accurate driving record is essential; see "Transmission Line Structure Foundations" (1983) and Peck et al. (1974).
f. Anchor devices vary greatly. Most utilities have a program to load test anchors to verify the design capacity and installation procedures. More specific information is outlined in Littlejohn and Bruce (1975).

10.2.3.4 Structure Grounding

Grounding of the towers and foundations should be installed in accordance with the utility standards. Procedures vary greatly depending on the soil conditions and the utility's standards. Normally individual

Table 10.1: Summary of Construction Effects on Foundation Performance

Foundation Types (1)	Construction Equipment (2)	Construction Effects (3)
Drilled Shafts		
Straight Single bell Multiple bell Grooved	Auger, Drilling bucket Hammer grab, Core barrel, Drilling bit, Underreamer, Grooving tool, Slurry equipment, Casing, Liner	1. Soil disturbance adjacent to shaft. 2. Shaft deterioration with time between excavation and concrete pour. 3. Overexcavation. 4. Ground loss adjacent to shaft. 5. Debris at bottom of shaft. 6. Voids and defects from water inflow, soil collapse, soil squeeze, and improper extraction of casing. 7. Concrete segregation, cold joints and warping of reinforcing cage.
Driven Piles		
Timber Precast concrete Prestressed concrete Steel (pipe, box, and H-sections) Fluted, tapered steel tube Pressure injected footing Mandrel-driven shell (constant and tapered cross-section)	Steam hammer, Diesel hammer, Pile vibrator, Jetting device, Various augers, and drills for partial advance of pile	1. Densification of loose cohesionless soil. 2. Remolding of cohesive soil. 3. Vibrations. 4. Reduction of side resistance from jetting or withdrawal of driving tube. 5. Heave, lateral displacement, or settlement of adjacent ground. 6. Subsurface deflection of pile. 7. Breakage from hard driving.
Backfilled Foundations		
Grillage (single base and pyramid configuration) Grillage with concrete slab Spread footing Plate anchor Concrete pier	Various types of excavation machinery, Compaction equipment	1. Compactive effort and height of backfill lifts. 2. Changes in water content caused by excavation and exposure to weather. 3. Dimensions of excavation. 4. Disturbance and debris at base and sides of excavation.
Anchors		
Grouted soil anchor Grouted rock anchor Helix anchor (single and multiple helices)	Rotary drill, Percussive drill, Rotary-percussive drill, Auger, Hydraulic torque head	1. Ground disturbance adjacent to anchor. 2. Deviation from alignment. 3. Control on cement mix and pressure injection. 4. Cartridge insertion, mixing, and temperature control for resin grouts. 5. Downward pressure, rate of advance, and torque on helix anchor. 6. Defective bonding and continuity loss from inadequate flushing of cuttings from hole. 7. Voids and defects from water inflow, soil collapse, and grout rejection.

Table 10.2: Comparative Summary of the Effects on Foundation Construction

Effects of Foundation Construction (1)	Drilled Shafts (2)	Driven Piles (3)	Backfilled Foundations (4)	Anchors (5)
Compelte alteration of soil affecting uplift resistance	○	○	●	○
Changes in soil density, *in-situ* stress, and strenght adjacent to foundation	●	●	●	●
Strong construction vibrations	○	●	○	◐
Large ground movements adjacent to foundation	◐	●	◐	○
Foundation defects from soil deformation, sloughing, and water inflow	◐	○	○	◐
Time-dependent strength loss from exposure during construction	◐	○	◐	○
Deviation from intended alignment	○	◐	○	◐

Note: ● = Strong likelihood; ◐ = moderate likelihood; and ○ = little or no likelihood.

tower resistance readings are obtained prior to installation of the overhead ground wires (if the overhead ground wire is not insulated from the tower). Detailed information can be found in "Transmission Line Grounding" (1982).

10.2.4 Tower Erection

The *IEEE Guide to the Assembly* (1985) provides extensive material on erection of self-supporting and guyed towers. It is unrealistic to set arbitrary standards for tolerances on foundation setting and structure alignments. These tolerances are greatly dependent on the type of foundation and structure used.

For self-supporting latticed towers, a standard that is used by many utilities is a ratio for the completed structure of 1 in. out of vertical alignment for every 40 ft of structure height.

For guyed structures the out-of-plumb criteria for self-supporting latticed towers has been used. It is good practice to visually inspect guyed structures after the conductors have been installed to ensure that movements have not occurred in the structure and the guys due to the weight of the conductors.

10.2.5 Wire Stringing

The *IEEE Guide to the Installation* (1980) and Kurtz and Shoemaker (1981) provide extensive information on wire stringing procedures. Chapter 1.0 of this Manual outlines some special loading conditions that can be placed on the structure by the stringing procedures. Construction procedures are normally outlined in detail in the construction specification.

10.2.6 Field Inspection and Records

10.2.6.1 General

The purpose of field inspection is to ensure that all phases of construction comply with the plans and specifications. The utility should confirm that procedures are effective in meeting these goals. Field inspection includes timely visits to the construction site, observations of the construction procedures and methods, and confirmation that the inspection reports are being properly maintained so that completed work items will be accepted.

10.2.6.2 Inspector Responsibilities

The utility's field inspector should conduct all field inspections and maintain all job records. The record should include all pay items, their respective construction progress and percent completion. The contractor, the field engineer, and the inspector should conduct periodic field meetings to review and resolve material and installation problems and to monitor the job progress. The inspector should promptly resolve deviations between the plans and specifications and the field conditions. Upon completion of the project, approved field changes should be recorded and the "as-built" prints should be forwarded to the utility.

10.2.6.3 Inspections

The contract documents should clearly define what inspections will be performed, who will perform them, and, if possible, the acceptable plan deviation limits. The specifications should identify what records are required and who should receive them. Many of these items should be reviewed at the preconstruction meeting attended by the contractor, field engineer, and inspector. Resolution of potential problems at an early stage will result in the most cost-effective project. Some of the

inspections which may be conducted and/or records which may be maintained include:

a. Foundation records should cover backfill material, compaction effort, rock elevations, setting and alignment accuracies, drilled pier depths, excavated wall conditions, pile type and size, pile blows per foot and final blows per inch, pile cutoff elevations, anchor types and installation, anchor pretension load and tests, anchor grout material, concrete tests, and placement of forms and reinforcement.
b. Tower records should document fabrication defects, material finish, tower fit up, plumbness and alignment of structures, bolt torque as required, erection procedures, guying procedures, and construction difficulties.
c. Cable records should reflect stringing set-ups, handling of insulators and hardware, sagging and final clipping, installation of spacers, dampers or spacer-dampers, and installation of splices.

10.3 MAINTENANCE

10.3.1 General

Although the initial tower design is focused on new construction, the utility is also concerned about preserving the structural integrity during the life of the line. In addition, the need may arise for wire rearrangements and possibly upgrading of the electrical capacity of the line. Consequently the condition of the structure is of continuing concern to the utility.

Maintenance involves inspections, repairs, and records of these activities during the life of the structure. The maintenance crew should have an understanding of the tower design limitations before contemplating any structural changes or wire modifications. The replacement of damaged members or wire restringing and adjustments which differ from the original construction can produce overstress in tower members. Proper maintenance and a careful review of any proposed changes in the structure or the wire is necessary for the safety of the work forces and the public.

10.3.2 Periodic Inspections

Many utilities have an established maintenance inspection program conducted at defined frequencies. Aerial inspections should be supplemented with ground inspections. A climbing inspection program should be established at less frequent intervals.

Above-ground inspections may reveal loose or missing bolts, fatigue or weathering problems, damage from structural overload, damage to

member or bolt finish, vandalism including insulator, hardware, or conductor damage, and collision damage.

At-ground line inspection may reveal foundation deterioration, loose or damaged guys, deterioration due to lack of vegetation maintenance, ground surface erosion, landslides or soil creep, settlement or subsidence, and flooding.

10.3.3 Scheduled Maintenance and Repairs

Maintenance or repairs should not be attempted before a determination is made concerning the need for a line outage. If an outage is required, arrangements should be made with the appropriate operating personnel. All utility work rules and safety procedures must be strictly followed. If necessary, an engineering evaluation should be performed; then the proper procedure can be established for the work planned. Structural repair plans and procedures should be reviewed with the maintenance crew before the work begins. If required, temporary supports or guys must also be in place at that time.

Galvanized or painted steel towers will eventually require maintenance painting. The painting interval should be established by the utility's past experience and an evaluation of the effectiveness of the coating system. The painting system should be compatible with the previous surface finish. Protection of the tower base from deterioration, corrosion, or damage should be addressed.

In many situations, damage to insulators or hardware may be repaired with the line energized. Utility procedures for this work are normally well established and should be followed. Provisions on the tower for attaching various "hot-line maintenance" tools are normally provided in the original tower design.

10.3.4 Upgrading and Reconductoring

Upgrading or reconductoring may impose a new set of load conditions on the tower (*IEEE Trial-Use Guide* 1985). The engineer will then be required to reevaluate the structure. Material properties and the condition of the tower and foundation will require reassessment. Different wire stringing procedures may be employed. Old wire is often used to pull in new wire. Occasionally wires are temporarily dead-ended. Lowering wires to the ground causes increased weight spans on adjacent towers. These conditions should be evaluated and the stringing crew made aware of the tower limitations under the proposed conditions. The sag angle of the conductor to the insulator string can affect the crossarm loads. Inclined guys may also increase loads on certain tower members. Although similar to new construction, these conditions may create unique loads that must be carefully addressed.

REFERENCES AND BIBLIOGRAPHY

References

"Excavations, Trenching and Shoring." (1987). Sub-Part P, Part 1926—Safety and Health Reg. for Const., *OSHA Safety and Health Standards*, Occup. Safety and Health Admin., Washington, D.C.

IEEE Guide to the Assembly and Erection of Metal Transmission Structures. (1985). IEEE Proposed Standard P951, Inst. of Elect. and Electr. Engrs., Inc., New York, N.Y.

IEEE Guide to the Installation of Overhead Transmission Line Conductors. (1980). IEEE Standard 524, Inst. of Elect. and Electr. Engrs., Inc., New York, N.Y.

IEEE Trial-Use Guide for Transmission Structure Foundation Design. (1985). IEEE Standard 691, Inst. of Elect. and Electr. Engrs., Inc., New York, N.Y.

Kurtz, E. B., and Shoemaker, T. M. (1981). *The lineman's and cableman's handbook*, Sixth Ed., McGraw-Hill Book Co., Inc., New York, N.Y.

Littlejohn, G. S., and Bruce, D. A. (1975). "Rock anchors—State of the art, Part 2, Construction." *Ground Engr*. 8.

Peck, R. B., Hanson, W. E., and Thornburn, T. H. (1974). *Foundation engineering*, Second Ed., John Wiley and Sons, New York, N.Y.

Standard Specification for End Bearing Drilled Piers. (1979). ACI Commit. 336, Publication Number 336.1–79, Amer. Concrete Inst., Detroit, Mich.

Suggested Design and Construction Procedures for Pier Foundations. (1972). ACI Commit. 336, Publication Number 336.3R-72, Amer. Concrete Inst., Detroit, Mich.

"Transmission Line Grounding." (1982). Two Vol., *Report EL-2699*, Elec. Power Res. Inst., Palo Alto, Calif.

"Transmission Line Structure Foundations for Uplift-Compression Loading." (1983). *Report EL-2870*, Electric Power Res. Inst., Palo Alto, Calif.

Woodward, R. J., Gardner, W. S., and Greer, D. M. (1972). *Drilled pier foundations*. McGraw-Hill Book Co., Inc., New York, N.Y.

Bibliography

Guidelines for Transmission Line Structural Loading. (1984). Commit. on Elect. Transm. Struct. of Commit. on Anal. and Design of Struct. of Struct. Div., ASCE.

Appendix I

NOTATION

The following symbols are used in this Manual:

A	= cross-sectional area (in.^{2});
A_g	= gross cross-sectional area (in.^{2});
A_n	= net cross-sectional area (in.^{2});
A_s	= tensile stress area of bolt (in.^{2});
A_{sc}	= cross-sectional area of stud shear connector (in.^{2});
A_t	= minimum net area in tension (in.^{2});
A_v	= minimum net area in shear (in.^{2});
a	= distance from shear center to load plane (in.);
b, b_1, b_2	= effective design widths of elements (in.), or width of leg – $t/2$ (in.);
C	= constant based on ratio of f_1 and f_2;
C_c	= column slenderness ratio separating elastic and inelastic buckling;
C_m	= coefficient applied to bending term in interaction formula for prismatic members;
C_w	= warping constant of cross section (in.^{4});
D	= downthrust load: net difference in compression and uplift reactions on anchor bolts (kips);
d	= nominal diameter of bolt (in.), or minimum depth of stiffener (in.);
d_h	= diameter of attachment hole (in.);
E	= modulus of elasticity of steel (29,000 ksi);
E_c	= modulus of elasticity of concrete (ksi);
e	= distance from center of hole to end of member (in.);
e_m	= required distance from center of hole to end of member (in.);
F_a	= axial compressive stress permitted in primatic member in absence of bending moment (ksi);
F_b	= bending stress permitted in primatic member in absence of axial force (ksi);
F_{cr}	= critical stress for local buckling of plain angle members (ksi);

F_t = allowable axial tensile stress (ksi);
$F_{t(v)}$ = allowable axial tensile stress in conjunction with shear stress (ksi);
F_u = specified minimum tensile strength (ksi);
F_v = allowable shear stress (ksi), or allowable average shear stress for beam webs (ksi)
F_y = specified minimum yield stress (ksi);
f = stress in compression element computed on basis of effective design width (ksi), or distance from center of hole to edge of member (in.);
f_1, f_2 = stress, in tension or compression, on an element (ksi);
f'_c = specified compressive strength of concrete at 28 days (ksi);
f_m = required distance from center of hole to edge of member (in.);
f_v = computed shear stress (ksi);
g = transverse spacing locating fastener gage lines (in.);
h = clear distance between flanges of beam (in.);
I = moment of inertia in truss plane (in.^{4});
I_{ps} = polar moment of inertia about shear center (in.^{4});
I_u = moment of inertia about U-U axis (in.^{4});
I_x = moment of inertia about X-X axis (in.^{4});
I_y = moment of inertia about Y-Y axis (in.^{4});
I_z = moment of inertia about Z-Z axis (in.^{4});
J = torsional constant of cross section (in.^{4});
j = torsional constant to determine torsional-flexural buckling values (in.^{4});
K = effective length factor for prismatic member;
K_t = effective length factor for warping and rotation;
K_u, K_x, K_y = effective length factor for buckling in designated axis;
L = for columns, actual unbraced length of member (in.), or distance from center of attachment hole to member edge (in.);
L_x, L_y = unbraced length in designated axis;
M_{ax} = allowable bending moment about X-X axis (kip-in.);
M_{ay} = allowable bending moment about Y-Y axis (kip-in.);
M_b = lateral buckling moment for angles (kip-in.);
M_e = elastic critical moment (kip-in.);
M_x = bending moment about X-X axis (kip-in.);
M_y = bending moment about Y-Y axis (kip-in.);
M_{yc} = moment causing yield at extreme fiber in compression (kip-in.);
M_{yt} = moment causing yield at extreme fiber in tension (kip-in.);
M_1 = smaller moment at end of unbraced length of beam-column (kip-in.);
M_2 = larger moment at end of unbraced length of beam-column (kip-in.);

m_t = required distance to prevent failure due to lateral bursting (in.);
m_v = required side cover distance for shear (in.);
n = number of threads per inch;
P = capacity of angle shear connector (kips), or axial tension or compression load on member (kips), or force transmitted by a bolt (kips);
P_a = allowable axial compression load on member (kips);
P_{ex} = Euler buckling load in X-X axis (kips);
P_{ey} = Euler buckling load in Y-Y axis (kips);
Q_n = capacity of a shear connector (kips);
r = governing radius of gyration (in.);
r_{ps} = polar radius of gyration about shear center (in.);
r_t = equivalent radius of gyration for torsional buckling (in.);
r_{tf} = equivalent radius of gyration for torsional-flexural buckling (in.);
r_u = radius of gyration for U-U axis (in.);
r_x = radius of gyration for X-X axis (in.);
r_y = radius of gyration for Y-Y axis (in.);
r_z = radius of gyration for Z-Z axis (in.);
S_u, S_x, S_y, S_z = elastic section modulus in designated axis (in.^{3});
S_{xc} = elastic section modulus about X-X axis of compression flange (in.^{3});
s = longitudinal center-to-center spacing (pitch) of any two consecutive holes (in.);
s_m = required spacing between centers of adjacent holes (in.);
T = axial tensile load on anchor bolts (kips);
t = thickness of element (in.);
u = U-U axis designation, or coefficient of friction;
u_o = distance between shear center and centroid (in.);
V = shear load perpendicular to anchor material (kips);
V, V_1, V_2 = shear in a single-angle beams (kips);
w = flat width of element (in.), or unit weight of concrete (lbs. per cu. ft);
w_s = flat-width of edge stiffener (in.);
x = X-X axis designation;
y = Y-Y axis designation;
y_o = distance between shear center and centroid (in.);
z = Z-Z axis designation;
Θ = angle between flange and stiffener lip (degrees), or angle between load and z-axis (degrees);
ϕ = resistance factor; and
α = angle between bracing member and supported member (degrees).

INDEX

Allowable bearing stress, bolts, 70, 74
Allowable bending moments, 36, 38–40
Allowable bending stress, 36–37, 38
Allowable compression, 44
Allowable compression stress, 25–26, 28, 30
Allowable shear, 41, 54
Allowable stress, 50
Allowable tensile load, 35
Allowable tensile stress, 33, 70, 73
Allowable tension, 36
Allowable tolerances, 96
Anchor bolts, 34, 101–102, 104, 106–107
Anchorage shears, 106
Anchors, 115
Angle members, 33–34, 45, 46–49
Angle shear connectors, 108–109
Angles, 41
Attachment holes, 72, 78–80
Axial compression, 35, 45, 52
Axial forces, 14
Axial tension, 35–36, 52
Backfill density, 115
Base plates, 102, 104, 106–107
Beam webs, 41, 54
Beams 36–40, 53–54
Bending, 35–36, 52
Bills of material, 82
Bolt diameter, 72
Bolt hole spacing, 70–71, 74–75, 78, 83
Bolt shear capacity, 69–70, 73
Bolt tension capacity, 70, 73–74
Bracing members, 17
Buckling load, 16
Built-up components, 84
Cable records, 120
Channels, 36–37, 53
Closed cross sections, 33
Closed sections, 84
Cold bending, 85
Cold-formed shapes, 44
Compression members, 35; angles, 26–28, 45–49; symmetrical lipped angles, 28–29, 50
Computer analysis, 20
Concrete, 102–105;
Concrete foundations, 100–106, design considerations, 106–108
Connections, 83
Construction loads, 4
Construction management, 113
Contract documents, 119–120
Corrosion, 99–100
Coupon tests, 88
Cross sections, 25, 43–44
Cruciform sections, 36–37, 53
Deadend towers, 2
Deflections, 54, 91
Deformed bar anchor bolts, 101, 105–106
Deformed structure, 17
Detailing, 82–84, failures during testing, 83
Deterioration, 99–100
Determinate static analysis, 16
Differential movement, 99
Dimensional accuracy, 84
Displacements, 17

Double circuit tower, 9
Drainage, 100
Dynamic analysis, 19
Eccentric connections, 33, 34
Effective lengths, 26–28, 45, 47–48
Effective widths, 30–32, 50–51
Elements in compression, 30–32, 51
Elements with stress gradients, 31–32
Engineer of record, 69, 82–83, 87, 89
Equal leg angles, 38–40, 53–54
Equivalent radius of gyration, 29, 50
Erection drawings, 82
Excavation, 115
Existing towers, analysis of, 20
Fabrication, 84–85
Failures, 91
Fasteners, 69–70, 73–74
Field inspection, 119–120
First-order linear elastic analysis, 16–17
Flexible towers, 17
Flexural buckling, 32
Foundation construction, 115
Foundation design, 98–100
Foundation movements, 99
Foundation performance, 114–115
Foundation records, 120
Foundation types, 100
Galvanizing, 85
Geometric nonlinearity, 17
Grillages, structural members, 102
Ground water, 100
Grounding, 115, 118
Grout, 102
Guyed towers, 10–12, 17, 21, 118, 119
Guys, 35, 51; tensioning of, 3–4
H-frames, 21
Hole diameter, 72
Holes, 85. *See also* Attachment holes; Bolt hole spacing
Horizontal bracing, 12
Hot bending, 84
Hot-line maintenance, 121
Hot-rolled sections, 44
I sections, 36–37, 53
Inspection, 96, 119–120
Inspection reports, 119
Inspector responsibilities, 119
Job records, 113
Joint restraint, 28
Laterally supported beams, 36
Latticed masts, 21–22
Latticed structures, 19, 43, 118–119
Laydown areas, 114
Leg members, 20–21, 26
Line outage, 121
Lips, 29, 33, 50
Load application, 90
Load conditions, 121
Load factors, 99
Load measurement, 90–91
Load transfer, 102
Loading combinations, 1–4
Loading procedure, 90
Local buckling, 45, 50
Longitudinal loads, 2, 4
Maintenance inspection program, 120–121
Maintenance loads, 4
Marshalling yard, 114
Material, 24, 42–43, 69, 83, 84, 96
Material handling, 114
Material inspection, 114
Member failure, 91
Member intersections, 12
Member sizes, influence of, 19
Members, minimum sizes, 25, 99–100
Mill test reports, 84, 88
Multicircuit towers, 1–2
Node locations, 19
Nonlinear analysis, 17, 18
Nonsymmetric cross sections, 33, 51
Oblique wind loads, 3
Open cross sections, 32, 37, 38, 53
Overhead ground wires, 2, 3, 118
Overload capacity factors, 99
Piece marks, 85
Piling, 115
Plan bracing, 12
Postbuckling strength, 50
Preliminary review, 96
Pressed plate, 101
Project control, 113
Prototype tower, 88
Quality assurance, 94, 95
Quality control, 84, 85, 94, 95
Reconductoring, 121

Redundant members, 27–28, 48
Repairs, 121
Rigid foundations, 87
Rotation, 50
Scope of work, 114
Second-order elastic analysis, 17
Section properties, 24, 36, 43–44
Self-supporting towers, 8–10, 16
Shear, 106–108
Shipping, 85
Shop assembly, 84
Shop detail drawings, 69, 82
Shop operations, 84–85
Shoring, 115
Side cover distances, 106–108
Single circuit towers, 3, 9
Six basic loadings, 1
Slenderness ratio, 25, 35, 43, 50
Small line angle structures, 3
Smooth bar anchor bolts, 101, 105
Specifications, 69, 84
Standard specifications, 24
Steel grillage, 101
Steel members, 43
Steels, 24, 42–43, 83, 84
Stitch bolts, 35
Strain, 2
Strain measurements, 88
Stress gradient, 31–32
Stretch of cables, 35, 51
Structural failure, 91
Stub angle anchorages, 106
Stub angles, 102, 104–105
Stud shear connectors, 108
Subcontracts, 96
Subsurface investigation, 100, 115
T sections, 37, 53
Tension, 106, 108
Tension members, 33–35, 51
Tension system, 16–17
Tension-only members, 83
Test facility engineer, 87
Test loads, 89
Test report, 92
Test tower assembly, 88–89
Test verification, 28
Threaded rods, 34
Torsional buckling, 32, 45
Torsional-flexural buckling, 32, 44, 45
Tower configuration, development of, 9–10
Tower deflections, 91
Tower erection, 118
Tower model, 14–16
Tower records, 120
Tower sites, 114
Transverse loads, 2
Transverse wind, 3
Ultimate strength, 44–45
Unbalanced loading, 2
Unequal height leg extensions, 99
Uniformly compressed elements, 30–31
Upgrading, 121
Variable tower heights, 3, 10
Vertical loads, 2
Vibration, 43
Warping, 50
Weathering steel, 83
Web bracing, 10
Welded connections, 84
Welding, 85
Width to thickness ratio, 26, 28, 30, 44, 45, 50
Wind loading, 3
Wind speeds, 43
Wire stringing, 119
Yield points, 88

LIBRARY & DOCUMENTATION CENTRE
LARSEN & TOUBRO LTD.
CONSTRUCTION GROUP
BOX: 979
POONAMALLEE ROAD
MANAPAKKAM. MADRAS-600 089.